muratec™

a product of murata technology

M3000 Operating Instructions

Table of Contents

Quick-Reference List

Your M3000 can print a convenient quick-reference list of the fax commands and user setting options available to you.

Just press **Program**, ✻ (the asterisk key), **8**. The M3000 will print the list for you.

Introduction
- Table of Contents . . . 1
- Specifications . . . 3
- Regulations . . . 5

Layout and Installation
- Before You Install (Phone and Electrical Information) . . . 7
- Unpacking Your Fax . . . 8
- Machine Layout . . . 9
- Keyboard Layout . . . 10
- Fax Installation . . . 13
- Replacing Donor Film . . . 14
- Installing Copier Paper . . . 16
- Using Your Fax As A Copier . . . 17
- Telephone Features . . . 18

Fax and Telephone Information and Setup
- Fax Standards and the Telephone System . . . 19
- Manual and Automatic Reception Options . . . 19
- Using Your Fax with an Answering Machine . . . 21

User Settings
- Setting the Language of Operation . . . 23
- Set Phone Line Type . . . 23
- Set Communication Result . . . 23
- Set Scanner Width . . . 24
- Set Grayscale . . . 24
- Set Primary Resolution . . . 25
- Set Original Contrast . . . 25
- Set Dialing Pause . . . 26
- Set Number of Rings . . . 26
- Set Second Telephone Hold . . . 27
- Set Journal Print On/Off . . . 27
- Set Reduction . . . 28
- Block Junk Fax . . . 28
- Set ECM Mode . . . 29
- Set Copy Protect . . . 30
- Remote Diagnostics . . . 30
- Set Date and Time . . . 31
- Set Redial Attempts . . . 31
- Set Redial Interval . . . 32
- Set Auto Receive Time . . . 32
- Set Hold Melody . . . 33
- Enter Your TTI . . . 33
- Set Passcode . . . 35
- Closed Network . . . 35
- Set SecureMail Boxes . . . 36
- Print SecureMail Box List . . . 37
- SecureMail Storage . . . 38
- Clear All Settings . . . 38
- Checking Memory in Use . . . 39
- Print User Settings . . . 39

Reception
- Reception Options . . . 41
  - Manual Reception . . . 41

What If I Answer In Another Room? 41
Automatic Reception 41
Special Answering Features 42
Printing SecureMail 43
Call Reserve 43
Responding to a Call Request 44
Block Junk Fax Reception 44

Transmission

Original Document Size 45
Inserting a Document 45
Sending Photographs 45
Redialing Busy Numbers 45
Transmitting with the Numeric Keypad 46
Transmitting with a One-Touch Key 47
Transmitting with a Speed-Dial Number 47
Transmitting with the Monitor or Handset 48
Transmission Safeguards 48
Secure Send Mode 48
Forced 4800 Mode 49
Delayed Transmission 49
Relay Broadcast Initiation 50
Transmit SecureMail 52
Call Reserve 53
Responding to a Call Request 53

Polling

Polling 55
Sequential Polling 56
Storing Documents for Polling 57
Removing a Polling Document 57

Autodialer

One-Touch Keys 59
Edit or Erase One-Touch 61
Print One-Touch 61
Speed-Dial Numbers 62
Edit or Erase Speed-Dial 64
Print Speed-Dial 65
Special Programmable Keys 65
Edit or Erase Programmable Keys 73
Print Programmable Keys 73
Tone Key and Rotary Dial Systems 74

Delayed Commands

Printing Commands 75
Erasing a Command 75

Software Switches

Adding to Document Length for TTI 77
Unlimited Page Length Reception 78
Unlimited Page Length Transmission 78
Switch-to-Fax Signals 79
Select Auto Answer by Telephone 80
Print Counter 80
Voice Prompt Delay 81
Set Scanner Width 82

Activity Journal

. 83

Problem Solving and Maintenance

Paper Jams 85
Troubleshooting 86
Maintenance 89

Common Questions 91
Glossary and Warranty
Glossary 97
Warranty 103

Do You Have a Comment?

Your comments and suggestions regarding this manual are welcome. Fax your comments to M3000 Manual, Murata/Muratec, Product Development, (214) 403-3499.

Copyright and Trademark Information

Specifications

Type: High-speed thermal transfer plain-paper facsimile transmitter/receiver for office use. **Compatibility:** CCITT Group 3 and Group 2 **Trans. Speed:** 18 seconds* per page average. **Phone Line:** Public switched telephone network (PSTN) or the equivalent. **Modem:** 9600 bps, with automatic fallback to 7200, 4800, and 2400 bps per CCITT V.29 and V.27 ter. **Data Compression Method:** MH, MSE. **Delayed Commands:** 5. **Document Feeder:** 30 pages. **Resolution:** Superfine 203 H x 392 V lpi, Fine 203 H x 196 V lpi, Norm 203 H x 98 V lpi. **Grayscale:** 16 levels. **Printing Width:** 8.5". **Scanning Width:** 10.1"**. **Scanning Method:** Solid-state CCD. **Recording Paper:** Bond paper, 8.5" x 11"; or 8.5" x 14". **Power:** 115V ± 10% 50/60 Hz. **Dimensions:** 19" (W) x 9.5" (H) x 19.5" (D). **Weight:** 42 lbs. **Orig. Doc. Size:** Minimum: 4.7 (W) x 2.7" (L), Maximum: 11" (W) x 35.4" (L). **Page Memory:** 16 pages***.

* Based on memory-to-memory transmission of CCITT Test Chart 1 to a Muratec fax machine. Your transmission times will vary based on the size of your document, the complexity of images on the document and the resolution at which your document is transmitted.

** See page 82.

*** Based on CCITT Test Chart 1 stored at normal resolution. The number of pages stored in memory will vary based on the size of your documents and on the complexity of images on the pages scanned.

Regulations

FCC Regulations

Ringer Equivalence Number: 2.0B

Note: This equipment has been tested and found to comply with the limits for a Class B digital device, pursuant to Part 15 of the FCC Rules. These limits are designed to provide reasonable protection against harmful interference in a residential installation.

This equipment generates, uses, and can radiate radio frequency energy and, if not installed and used in accordance with the instructions, may cause harmful interference to radio communications. However, there is no guarantee that interference will not occur in a particular installation.

If this equipment does cause harmful interference to radio or television reception, which can be determined by turning the equipment off and on, the user is encouraged to try to correct the interference by one or more of the following measures.

- Reorient or relocate the receiving antenna.
- Increase the separation between the equipment and receiver.
- Connect the equipment into an outlet on a circuit different from that to which the receiver is connected.
- Consult the dealer or an experienced radio/TV technician for help.

Type of Service

Your fax is designed for use on standard device telephone lines. Your fax connects to the telephone line with a standard jack called the USOC RJ-11C. Connection to telephone company-provided coin service (central office implemented systems) is prohibited. Connection to party line service is subject to State tariffs.

Telephone Company Procedures

The goal of the telephone company is to provide you with the best service it can. In order to do this, it may occasionally be necessary for them to make changes in their equipment, operations, or procedures. If these changes might affect your service or the operation of your equipment, the telephone company will give you notice, in writing, to allow you to make any changes necessary to maintain uninterrupted service.

If you have any questions about your telephone line, such as how many pieces of equipment you can connect to it, the telephone company will provide this information upon request.

In certain circumstances, it may be necessary for the telephone company to request information from you about the equipment which you have connected to your telephone line. Upon request of the telephone company, provide the FCC registration number and the ringer equivalence number (REN) of the equipment which is connected to your line. Both of these numbers are listed on the equipment label attached to your fax machine.

The sum of all RENs on your telephone line should be fewer than five (5) in order to assure proper service from the telephone company. Sometimes, a sum of five (5) may not be usable on a given telephone line.

If Problems Arise

If any of your telephone equipment is not operating properly, you should immediately remove it from your telephone line, as it may cause harm to the telephone network. If the telephone company notes a problem, they may temporarily stop service. When practical, they will notify you before this disconnection. If advance notice is not feasible, you will be notified as soon as possible. When you are notified, you will be given the

opportunity to correct the problem and will be informed of your right to file a complaint with the FCC.

In the event repairs are ever needed on your fax, they should be done by Murata/Muratec or an authorized representative of Murata/Muratec. For information, contact the Muratec Customer Support Center (see page 90).

DOC Regulations

DOC Load Number: 20

This digital apparatus does not exceed the Class B limits for radio noise emissions from digital apparatus set out in the Radio Interference Regulation of the Canadian Department of Communications.

Le présent appareil numérique n'émet pas de bruits radioélectriques dépassant les limites applicables aux appareils numériques de la classe B prescrites dans le Règlement sur le brouillage radioélectrique édicté par le ministère des Communications du Canada.

NOTICE: The Canadian Department of Communications label identifies certified equipment. This certification means the equipment meets certain telecommunications network protective, operational and safety requirements. The Department does not guarantee the equipment will operate to the user's satisfaction.

Before installing this equipment, users should ensure that it is permissible to be connected to the facilities of the local telecommunications company. The equipment must also be installed using an acceptable method of connection. Sometimes, the company's inside wiring associated with a single line individual service may be extended with a certified connector assembly (telephone extension cord). The customer should be aware that compliance with these conditions may not prevent degradation of service in some situations.

Repairs to certified equipment should be made by an authorized Canadian maintenance facility designated by the supplier. Any equipment malfunctions or repairs or alterations made by the user to this equipment may give the telecommunications company cause to request the user to disconnect the equipment.

Users should ensure for their own protection that the electrical ground connections of the power utility, telephone lines and internal metallic water pipe system, if present, are connected. This precaution may be particularly important in rural areas.

Caution: Users should not attempt to make such connections themselves, but should contact the appropriate electric inspection authority or electrician.

The Load Number assigned to each terminal device denotes the percentage of the total load to be connected to a telephone loop which is used by the device to prevent overloading. The termination on a loop may consist of any combination of devices subject only to the requirement that the total of the load numbers of all the devices does not exceed 100.

The DOC Load Number for your fax is 20.

Installation

Telephone Requirements

Your fax works on standard telephone lines and, with Muratec's voice/fax switch and switch-to-fax options (see page 41), can share the line with a telephone answering machine or second telephone.

Your fax connects to the telephone system with a standard modular jack, called a USOC RJ-11C. If you do not have an RJ-11C jack where you want to install your fax, call your telephone company for information on installation.

Do not connect your fax to a private branch exchange (PBX) system without first checking with the system manufacturer or service representative. Some PBX systems are not compatible with facsimile operation.

You may want to connect your fax to a telephone electrical surge protector. A protector can absorb and divert damaging high-voltage surges in your telephone lines caused by static electricity or lightning.

A Note About Call-Waiting Signals

Fax transmission and reception can be stopped by telephone call-waiting signals. If you have requested call-waiting service for the line to which you will connect your fax, you may experience interruptions of facsimile service.

Electrical Requirements

Power your fax from any standard three-pronged 115-volt electrical outlet. Do not plug your fax into an outlet that is turned off at the end of the day: Although your telephone directory and most other user settings are protected against power failure for several days by a rechargeable internal battery, documents stored in memory will be lost if you turn off power to your fax.

Don't install your fax on the same electrical circuit as an air conditioner, copying machine or other high-consumption electrical appliance. These appliances can cause electrical "draw-downs" when they operate—temporarily reducing the power available for other equipment on the circuit—and could damage your fax.

You may want to power your fax from an electrical surge protector connected to your wall outlet. A surge protector protects your fax from high-voltage surges in your electrical lines that may cause damage to your fax.

Voltage Requirements

115 volts AC ± 10%, 50-60 Hz

Power Consumption

Standby 10 W
Transmission 40 W
Copy 170W
Reception 140 W

13. **Telephone Handset**—With keypad, ringer volume adjustment and rotary/tone dial settings for the handset keypad.

14. **Phone Jack**—Modular jack for attaching the telephone handset to your fax machine.

15. **LCD**—Two-line, 20-character display shows system status and fax operation.

16. **Keypad**—Controls your unit's operation. See the section below for information.

17. **Donor Film Level Indicator**—Displays donor film level. Green in the window indicates a full supply. A red display indicates an empty donor roll.

18. **Document Guides**—Guides adjust to accept pages up to 11 inches wide.

19. **Document Hopper**—Supports documents stacked in feeder.

20. **Top Cover Release**—Press down to open the top cover of your machine.

21. **Receive Tray**—Holds copied or received documents.

22. **Paper Size LEDs**—Indicate paper tray setting as "letter" or "legal".

23. **Paper Cassette**—Holds up to 250 sheets of letter- or legal-sized paper.

Keyboard Layout

The keys on your fax machine are used to enter information into your fax and to control the way your fax machine operates. Some keys, like **Monitor/Call** and **Confirm/Enter**, have two names because they perform two or more different functions at different times.

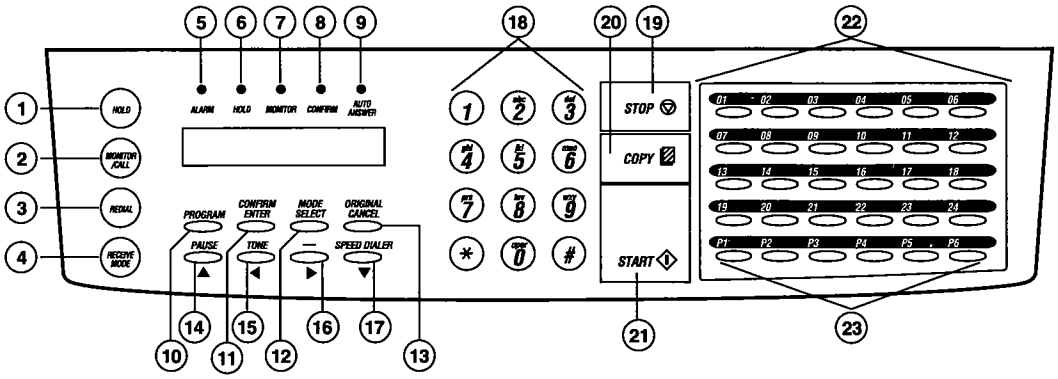

1. **Hold**—Press to place a call on hold. Your fax offers an optional hold melody (see page 33) that lets your callers know they've been put on hold.

2. **Monitor/Call**—Press for on-hook dialing of voice or fax calls. During fax communication, press to signal that you would like to speak with the remote fax operator, if one is present (see page 43).

3. **Redial**—Press to redial the last number dialed.

4. **Receive Mode**—Press to select from your fax machine's manual and automatic reception options. See page 19 for more information. The Auto Answer LED will light when an automatic reception option is selected.

5. **Alarm**—This LED lights when an error has occurred. Press **Stop** to return your fax to standby.

6. **Hold**— Lights when a caller is on hold.

7. **Monitor**—Lights when your fax machine's monitor is in use.

8. **Confirm**—Lights when a communication result (see page 23) has been requested after the current transmission.

9. **Auto Answer**—When lit, your fax responds to calls automatically (see page 41).

10. **Program**—Use the **Program** key to enter or "program" information into your fax

machine. You can press **Program** repeatedly to view each of the major command categories available in your fax.

11. **Confirm/Enter**—Press during transmission to manually request or cancel a confirmation report (see page 23). The Confirm LED will light when a report has been requested. This key is also frequently used while entering information into your fax.

12. **Mode/Select**—Before you transmit a document or copy it, press **Mode/Select** to choose the resolution needed. This key can also be used with the **Program** key to scroll through the major command categories in your fax.

13. **Original/Cancel**—Before transmission or copying, use **Original/Cancel** to choose the contrast setting. When entering a telephone number or programming other information in your fax, press **Original/Cancel** to delete the last character entered.

14. **Pause**—Use the **Pause** key when storing one-touch or speed-dial telephone numbers and when you transmit by entering a telephone number using the numeric keypad. This key instructs your fax to stop dialing for a few seconds and may be useful if you must dial through some telephone exchanges or when calling overseas. See page 26 for more information.

15. **Tone**—Used for special dialing requirements on some rotary telephone systems (see page 74).

16. **Dash Key**—Press to enter a dash, "—", in your telephone numbers and Subscriber ID. These dashes aren't needed by your fax, but they make it easier for you to review long telephone numbers in your telephone directories.

17. **Speed Dialer**—For transmission, press **Speed Dialer** before entering a two-digit speed-dial number. While sequential polling is underway, press **Speed Dialer** to interrupt the group function for a new command.

18. **Numeric Keypad**—Use to enter data, dialing instructions and speed-dial numbers.

19. **Stop**—Press to stop the facsimile function underway and return your unit to standby mode.

20. **Copy**—Press to copy documents inserted in the document feeder.

21. **Start**—Press to begin transmission or manual reception.

22. **One-Touch Keys**—One-touch transmission commands, numbered **01** through **24**, for your frequently called numbers.

23. **Programmable Keys**—Six keys, **P1** through **P6**, that can be used as one-touch transmission commands to a single remote unit or as multi-step commands for polling, relay broadcast initiation and other functions (see page 65).

Installation

1. Make sure the on/off switch at the right rear of the fax is off.

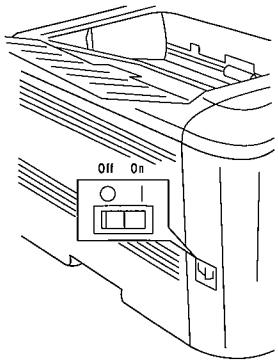

2. Next, plug the 6-foot telephone line that came with your fax into the connector marked "Line" at the left rear of your fax. Plug the other end into a telephone wall jack in your office.

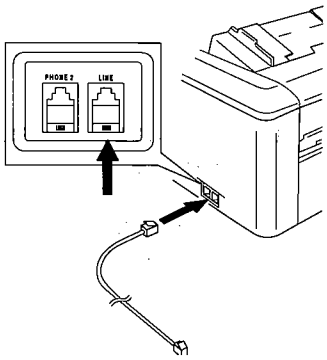

3. Plug the telephone handset cord into the connector on the handset cradle. Hang the telephone handset on the cradle.

4. If you will be using an answering machine or second telephone with your fax machine, connect the telephone line from this device to the "Phone 2" connector at the left rear of your fax. **Do not** connect the answering machine or telephone directly into a wall jack: To operate properly with your fax, an answering machine or telephone must be connected to your fax machine's "Phone 2" jack.

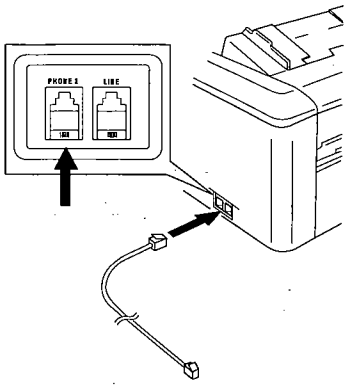

5. Attach the document tray to your fax machine as shown. This tray will hold your original documents after transmission or copying.

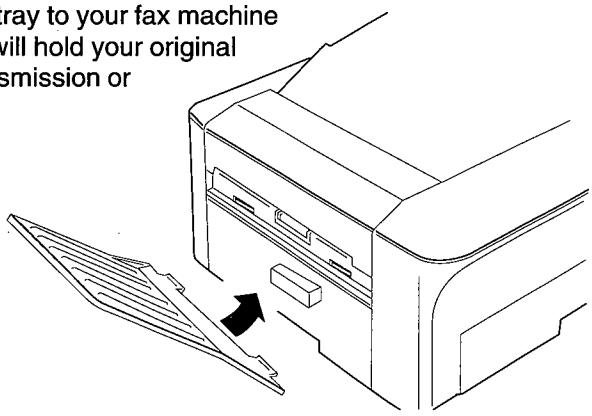

6. Attach the document hopper to your fax as shown. The hopper supports documents stacked in the feeder.

7. Flip the receive tray to the receive position. This tray holds copied or received documents.

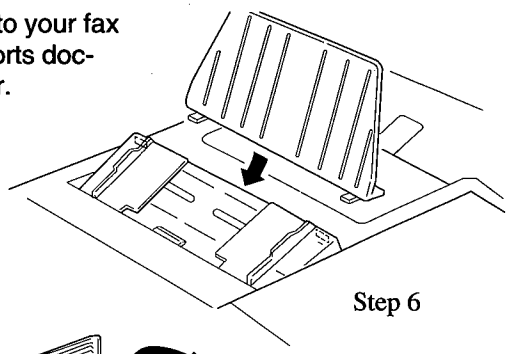

Step 6

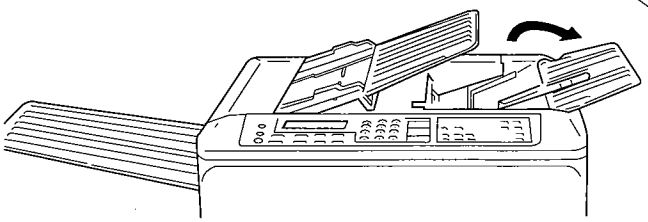

Step 7

8. Attach the power cord to the connector at the right rear of your fax. Plug the other end into a three-pronged electrical outlet.

9. Turn the on/off switch on.

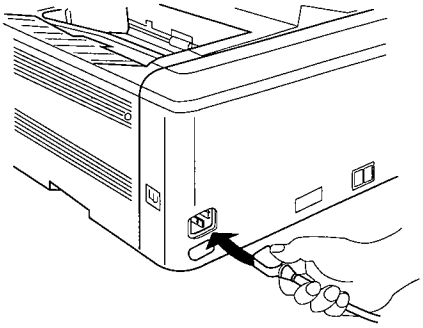

Replacing Donor Film

1. Press the top cover release button and open the top of your fax.

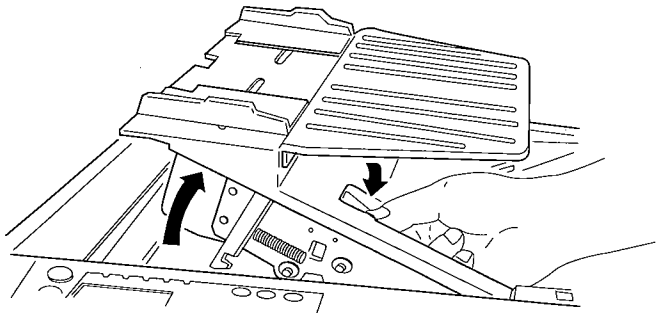

2. Using the handles, lift the donor film cartridge out of your fax.

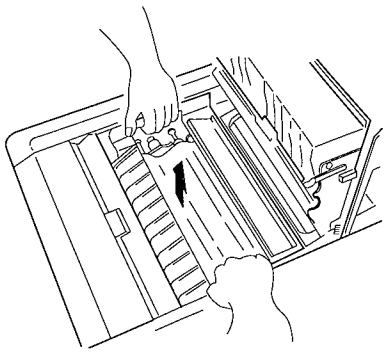

3. Turn the donor film cartridge over and rest it upside down on its handles, as shown. Grasp the cartridge frame firmly and remove the donor film rolls from the cartridge.

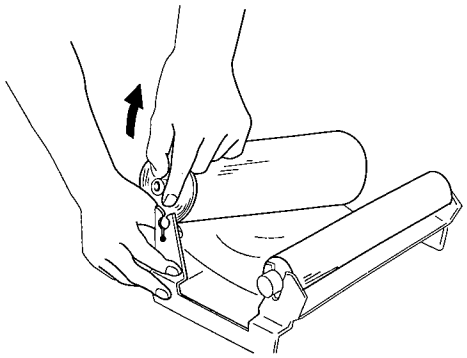

4. Remove the color coordinated gears from the ends of the used film rolls.

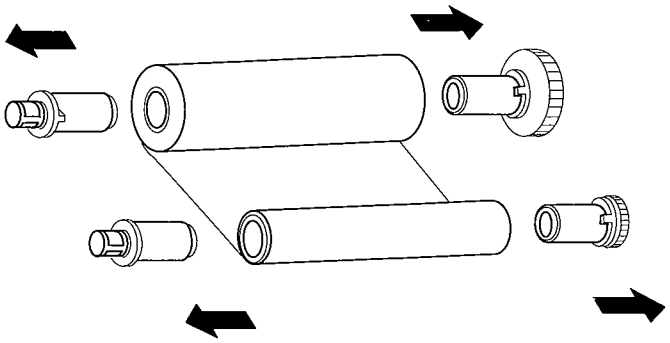

5. Insert the gears into a new set of donor film rolls. **Fit the large gear into the empty take-up roll and the small gear into the new donor film roll.**

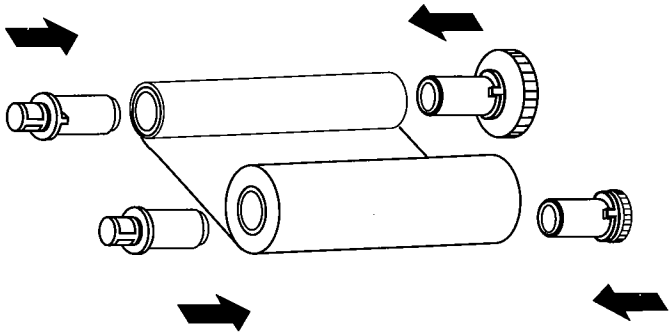

6. Fit the rolls into the donor cartridge, making sure that when the cartridge is placed in your fax, the empty take-up roll is placed in the right-side chamber and the new donor film roll is on the left-side chamber.

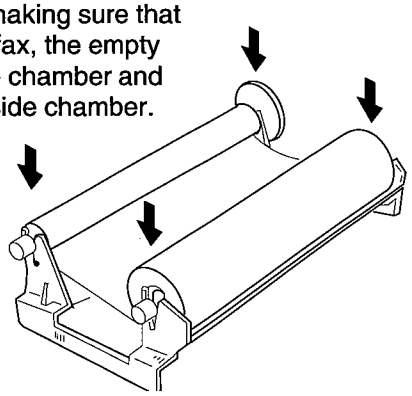

7. Place the cartridge back inside the M3000, resting the colored gears on their color-coordinating gear stands.

Please note:

The donor film roll used in the M3000 includes a short length of blue leader material in front of the black donor film. This blue material will not produce a fax image.

After you place the donor film on the cartridge in step 6, roll the empty take-up roller until the blue leader material is completely wound onto the take-up donor roll.

Telephone Features

Your fax machine and telephone handset are set initially for use on tone telephone systems rather than rotary. If your telephone system requires rotary dialing signals, be sure to select rotary dialing when you enter the "Set Phone Line Type" setting in the user settings (see page 23).

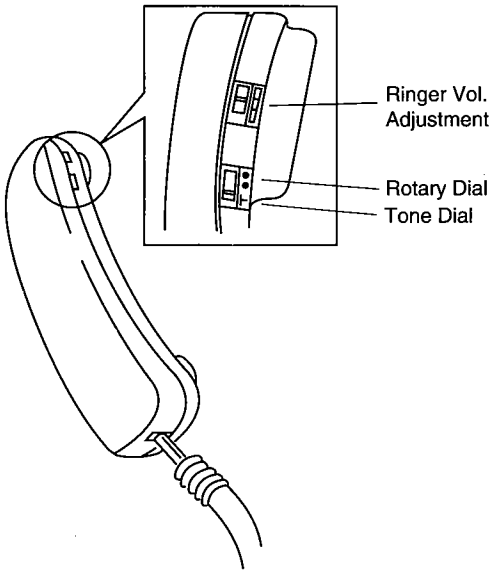

A small switch on the side of your fax machine's telephone handset controls the dialing signals produced by the handset keypad. The handset setting controls the dialing signals made by the handset's keypad: It does not change the dialing signals produced by the fax machine's autodialer or numeric keypad.

Refer to the diagram to make sure your handset will provide the dialing signals required by your telephone system.

These other telephone features are built into your fax:

Hold—Just press **Hold** to place a call on hold. Your fax includes an optional melody (see page 33) you can use to let your caller know the line is on hold.

Your fax will beep several times at one-minute intervals to remind you your caller is waiting. The Hold LED will also light while a call is on hold. If you have not picked up the call after five minutes, your fax will disconnect the call automatically.

To return to a call placed on hold, just pick up your machine's built-in handset or a telephone connected to the fax machine's "Phone 2" jack.

Monitor/Call—For hands-free voice or fax dialing, press **Monitor/Call** to get a dial tone while the fax machine's handset remains down. Then enter a telephone number using the numeric keypad, a one-touch key or **Speed Dial** and a two-digit speed-dial number. For voice dialing, pick up the handset when the call is answered. For fax dialing, make sure there is a document in the fax machine's feeder and press **Start** when the remote fax answers.

Redial—Press Redial to redial the last number attempted using the numeric keypad, a one-touch key or a speed-dial number. The **Redial** button cannot redial numbers called using the fax machine's handset or a telephone connected to the "Phone 2" jack.

Fax and Telephone Information and Setup

Information and Setup

Properly connecting your fax to your telephone system is probably the most important part of installing your new fax. Take a few minutes to review the way your fax connects to your telephone or answering machine.

Your Fax and the Telephone System

Your fax works on ordinary telephone lines, so it's easy to understand fax operation if you compare it to the way a regular telephone works. Having a fax, in fact, is a lot like having a telephone with bonus features.

All fax standards are regulated by the CCITT, an international regulatory agency of the United Nations. These standards ensure the compatibility of your fax with the millions of other Group 3 and Group 2 units worldwide, but they also impose a few limits on the way your fax can be used with other phones or answering machines.

The concept of how a fax works is simple:

When a transmitting fax scans in a document, it examines the picture content and converts the lines of information into a binary code of zeros and ones. The fax then compresses this information so it can be sent rapidly over the telephone line. In this regard, the only difference between a fax call and a regular telephone call is the content of the transmission: A fax transmission consists of digital information, while a regular telephone call transmits analog information—your voice.

An incoming fax call will make your telephone ring in exactly the same way a voice call would. In fact, there is no way to tell if an incoming call is from a fax or from a person until you or your fax machine answer the line.

During transmission, most fax machines send out very specific calling tones over the telephone line. (Not all units do, however, see page 22 for more information on these non-standard fax machines.) These tones, which sound like a piercing electronic whistle, identify the call to other fax machines as an attempted transmission. While these tones wouldn't make much sense to you if you heard them, they are the fax equivalent of making a voice call and identifying yourself: "Hello, this is Joe."

The answering fax machine responds to these signals using special receiving tones, which are its way of responding to the other unit's "greeting." This CCITT-controlled acknowledgement—just like a common greeting exchanged between you and your friends—is called handshaking.

Automatic and Manual Fax Reception

Fax machines offer two basic ways to answer incoming telephone calls: You can instruct your fax to ignore calls so you can answer them *manually*, or you can instruct your fax to answer calls *automatically*.

Your fax even offers a half-way point between these options, allowing you to attach a second telephone or answering machine without interrupting fax operations. Press the **Receive Mode** key to select from the four receive options explained below. Your LCD will show each option in succession: Tel Ready, Fax Ready, Tel/Fax Ready and Ans/Fax Ready.

Reception Options

Use Tel Ready mode when:

- Nothing is attached to your fax.
- Your M3000 will serve as both a fax machine and a business telephone.
- You will answer every call manually.

```
Tel Ready
Feb. 26, 1993     12:00
```

When your unit is set to "Tel Ready," you must answer your fax manually any time it is ringing. To answer a call, pick up the fax handset.

If the call is from a person, talk as you would normally. If the call is from a fax machine, you will hear the characteristic electronic fax tones. When you hear these tones, press your machine's **Start** button to return the remote unit's "greeting". Then hang up, and reception will begin.

Your fax machine's manual reception option is ideal if you have one telephone line that must serve double duty for fax and business use. That way, you answer all incoming calls, speaking normally to your voice callers and "greeting" remote fax machines by pressing **Start**. In the "Tel Ready" mode, your fax will never answer incoming calls.

This option is called "Tel Ready" on your fax machine's LCD because you answer all calls, fax and voice, using the built-in handset—just the same way you would answer a regular telephone.

Use Fax Ready mode when:

- Nothing is attached to your fax.
- A dedicated phone line is used for the fax, or you want the fax to answer all calls.
- You fax will answer every call automatically, unless you answer the call beforehand.

```
Fax Ready
Feb. 26, 1993     12:00
```

When your fax is set to "Fax Ready", it assumes the responsibility of answering all calls. The fax will answer calls after a specified number of rings (which you can control), exchange the standard fax "greeting" with the transmitting unit and then attempt reception.

You can choose to answer an incoming call manually before the fax responds. If you do, your options are the same as for manual reception: Pick up the built-in handset before your fax answers automatically and speak with your callers. Press **Start** if you hear fax transmission tones.

Use the Fax Ready setting when you have a dedicated line for the fax and receive your voice calls on a separate line. Because the fax answers automatically, your unit's voice prompt is not played and any voice callers will hear your fax machine's receiving tones.

This option is called "Fax Ready" on your the unit's LCD because the machine is "ready" for fax calls only.

Use Tel/Fax Ready mode when:

- A second phone is attached to the M3000's Phone 2 jack.
- Your office shares the fax line with the phone.
- Your fax will answer every call automatically, unless you answer the call beforehand.

```
Tel/Fax Ready
Feb. 26, 1993     12:00
```

You can connect a second telephone to your fax machine's "Phone 2" jack for added convenience. A second telephone allows several reception options.

First, you can choose to do nothing when your fax rings and let the fax answer all calls automatically. If the call is from a remote fax machine, your fax will receive the message automatically.

Any voice callers will hear the following voice prompt, informing them they've reached a fax machine.

Hello. If you wish to send a fax, transmit now. If not, check the number and dial again. Thank you.

This prompt is a pre-recorded part of M3000 software and is available in English or Spanish. (See Voice Prompt in the User Settings section for more information.)

Second, some people use the second phone option because they prefer to answer their calls using a conventional telephone handset or cordless telephone. When you connect a second telephone to the "Phone 2" jack and answer incoming calls before the fax

responds, your options are the same as for manual reception: Talk to your callers, but press **Start** if you hear fax transmission tones.

What if the telephone connected to the Phone 2 jack is on a long telephone cord—even one long enough to stretch into another room?

The switch-to-fax feature lets you transfer these fax calls back to the fax, but remember that the second telephone must be physically attached to the fax machine's "Phone 2" jack. (See the Switch-to-Fax section for more information.)

This feature is called Tel/Fax Ready on your fax machine's LCD because a telephone is used alongside the fax.

Use Ans/Fax Ready mode when:

- An answering machine is attached to your fax machine's Phone 2 jack.
- Your office shares the fax line with the telephone.
- Your answering machine will answer every call automatically if you do not answer the call manually first. While the answering machine responds to the call, your fax machine will listen for the standard fax greeting from remote units and will disconnect your answering machine to receive fax messages.

```
Ans/Fax Ready
Feb. 26, 1993     12:00
```

You can connect a telephone answering machine to your fax machine's "Phone 2" jack for the ultimate in fax/telephone convenience. With a few precautions to accommodate the standards every fax must adhere to, your answering machine and fax can work perfectly side by side.

When a fax machine dials automatically—as it does when you use a one-touch key for transmission or program a delayed command—it uses an internal clock to time and control its communication. A transmitting machine waits a set time after dialing to hear the receiving "greeting" from your fax. If it doesn't hear the proper reception tones within this limited period, it usually hangs up to dial again minutes later.

If a telephone answering machine is used on the same line as your fax, the whole transmission process for a remote unit—dialing your fax, ringing and waiting for your answering machine's outgoing message—can take 40 seconds or more. This exceeds the time limit set by the CCITT and would cause the transmitting fax to hang up.

To ensure smooth operation of your fax and answering machine, follow these guidelines:

1. First, make sure your answering machine's telephone line is connected to your fax machine's "Phone 2" jack. The answering machine's power cord should be plugged into an electrical outlet.
2. Use the **Receive Mode** key to make sure "Ans/Fax Ready" appears on your fax machine's display.
3. Set your answering machine to answer calls after one or two rings. Consult your answering machine's operating manual for instructions.
4. Create a short outgoing message for your answering machine, ideally one less than 10 seconds long.

When you choose the "Ans./Fax Ready" reception option, incoming calls will be answered by your answering machine, since it should be set to respond after one or two rings. While your answering machine's outgoing message is played, your fax will listen quietly on the line. Callers making voice calls will not know the fax is there.

If your fax detects the standard fax transmission tones from a remote unit it will disconnect your answering machine and begin reception.

Modifying Your Outgoing Message

Here is a suggested outgoing message for your answering machine. You can modify this message to suit your own needs:

Hello. You have reached (your business name or telephone number). If you would like to send a fax, press Start now. If you would like to leave a message, wait for the beep. Thank you.

Your callers can even leave both a voice and fax message on the same telephone call:

Modify your answering machine message to explain that callers can first leave a voice message on your answering machine, then press **Start** to begin their transmission. Your fax will detect the switch from voice to fax, and come on the line to print the message.

Silent Detect

Normally, your fax will seize the phone line when it hears transmission tones from a remote unit. You can change your machine's operation to suit a few particular fax-reception needs, however.

A few non-standard fax machines do not emit calling tones when they transmit. Your fax can use a "silent detect" option to accommodate these machines. Unless you select and activate the silent-detect feature, it will not effect your fax communication.

When the silent-detect feature is enabled, your fax listens to all incoming calls for one minute. If your fax detects a period of silence of a specific length, determined by you, it will disconnect the telephone handset or answering machine and attempt fax reception. In other words, when your fax detects this period of silence during the first minute of the call, it assumes a "silent" machine is on the line, and your fax will emit receiving tones.

You can set your machine's silent-detect sensor to monitor for a period of silence from 1 to 15 seconds. The sensor is initially set at 00, which turns the feature off.

Remember that when you activate this feature your fax will monitor for a period of silence during the first minute of *every* call. When this feature is active, try to avoid putting your caller on hold or setting the handset down during the first minute, since the resulting silence could cause your fax to attempt reception.

Also remember that this feature is designed to accommodate a very few non-standard fax machines. Unless you frequently communicate with such units, you can ignore this setting. To activate the "silent detect" feature:

1. Press **Program, 0, 4, Confirm/Enter.**

```
Set Silent Time
(0-15)          00
```

2. Enter the amount of time desired. You can enter any number between 01 and 15 seconds.

```
Silent Time Set
(0-15)          08
```

3. Press **Confirm/Enter.**

User Settings

Before entering these user settings in your fax, make sure your fax machine is properly installed and connected to your telephone system (see page 13).

Most user settings can be entered either when you install your fax or later on, after you find a need for a particular feature. You can enter the settings below in any order you wish, and you can ignore any settings that do not meet your particular fax needs.

Setting the Language of Operation

Your fax can display LCD screens, reports and journals in either English or Spanish. The voice prompt (see page 42) is also pre-recorded in English and Spanish.

Your fax is initially set for English-language operation. To select Spanish-language operation, press **Program** followed by the pound key (#). Then press **Stop**. Repeat this process to return LCD screens, reports and the voice prompt to English.

Set Phone Line Type

Your fax works well on either tone or rotary phone lines. It is set initially to use tone signals. If your phone system requires rotary signals, choose the appropriate setting from below. If you do not know the correct setting, call your local phone company:

1. Press **Program, 0, 9, Confirm/Enter.**

```
1. Set Phone Type
01-24      Enter/Select
```

2. Press **Confirm/Enter.**

```
Phone Type:      Tone
           Enter/Select
```

3. Press **Mode/Select** until you reach the desired setting.

```
Phone Type:      10 PPS
           Enter/Select
```

4. Press **Confirm/Enter.**

Set Communication Result

The Communication Result is a printed message from your fax showing that the document you set for transmission was sent to the location shown. It is especially useful when you use delayed commands to send or poll documents after hours.

1. Press **Program, 0, 9, Confirm/Enter, 0, 2.**

```
2. Set Comm. Result
01-24      Enter/Select
```

2. Press **Confirm/Enter**.

```
Automatic Print: Off
          Enter/Select
```

3. Press **Mode/Select** to turn the automatic print on. This will request a communication report after each transmission.

```
Automatic Print: On
          Enter/Select
```

4. Then press **Confirm/Enter**.

Set Scanner Width

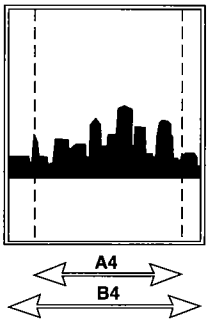

When you transmit wide documents, your fax will automatically reduce the size of the pages sent to accommodate the printing capability of the receiving fax.

If you want to transmit images from wide documents without this automatic reduction, adjust the scanning width of your fax. Your fax is set initially to scan to the B4 (9.9-inch) document width. You can adjust this to the narrower A4 (8.5-inch) width to transmit portions of a large page without reduction.

When you select the narrower width, your fax will ignore any image outside the active scanning area. If you select the A4 scanning width and insert an 11-inch-wide document, for example, your fax will scan the center 8.5 inches and transmit it unreduced. This setting will leave 1.25 inches unscanned on each side of the page.

(You can also expand your fax machine's B4 scanning width slightly, to 10.1 inches, with a special setting. See page 82.)

1. To set the scanner width, press **Program**, **0, 9**, **Confirm/Enter**, **0, 3**.

```
3. Set Scanner Width
01-24      Enter/Select
```

2. Press **Confirm/Enter**.

```
Scanning Size:   B4
          Enter/Select
```

3. Press **Mode/Select** until you reach the desired scanning width.

```
Scanning Size:   A4
          Enter/Select
```

4. Then press **Confirm/Enter**.

Repeat these steps to return the scanner to B4 after your transmission, so subsequent large documents aren't accidentally cut down by the narrower setting.

Set Grayscale

Your fax includes 16-level grayscale scanning ability, so it can accurately reproduce and transmit halftone images like photographs.

Your fax has two grayscale scanner settings. Setting 1 is ideal when sending halftone images that include text, like advertising layouts and magazine pages. Setting 2 provides even better grayscale transmission quality for halftone images that include no text.

Note: This setting gives your fax machine's scanner some very important information on the type of grayscale documents you most often send—those with text included, or those without. But remember, you still must select grayscale—"Gray" on your LCD—using the **Mode/Select** key before copying or transmitting a document.

1. To adjust the grayscale setting, press **Program**, **0**, **9**, **Confirm/Enter**, **0**, **4**.

```
4. Set Grayscale
01-24      Enter/Select
```

2. Press **Confirm/Enter**.

```
Grayscale 1
           Enter/Select
```

3. Press **Mode/Select** to choose the grayscale setting needed.

```
Grayscale 2
           Enter/Select
```

4. Then press **Confirm/Enter**.

Set Primary Resolution

Your fax offers several transmission resolutions, so every document you send arrives looking great.

If most of your transmissions require fine, superfine, or grayscale transmission, use this setting to save a step in all future transmissions: When you select a higher resolution as the primary mode, your fax will send all documents at this resolution unless you specifically change it using the **Mode/Select** key before transmission.

1. To set the primary mode, press **Program**, **0**, **9**, **Confirm/Enter**, **0**, **5**.

```
5. Set Primary Mode
01-24      Enter/Select
```

2. Press **Confirm/Enter**.

```
Primary Mode:    Norm
           Enter/Select
```

3. Press **Mode/Select** until you reach the desired transmission resolution.

```
Primary Mode:    Fine
           Enter/Select
```

4. Then press **Confirm/Enter**.

Set Original Contrast

Along with an adjustable primary resolution, your fax offers a primary contrast setting. Use the setting below to change the primary contrast setting.

1. Press **Program**, **0, 9**, **Confirm/Enter**, **0, 6**.

```
6. Set Contrast
01-24      Enter/Select
```

2. Press **Confirm/Enter**.

```
Original:        Norm
           Enter/Select
```

3. Press **Mode/Select** to select the contrast setting you need.

```
Original:        Dark
           Enter/Select
```

4. Then press **Confirm/Enter**.

Set Dialing Pause

The **Pause** key on your fax lets you insert dialing pauses into numbers stored in your autodialer (see page 59). These pauses may be needed when calling on systems that require "9" to reach an outside line, on branch systems or when calling overseas.

1. To set the number of seconds your fax should wait when it encounters a dial pause, press **Program**, **0, 9**, **Confirm/Enter**, **0, 7**.

```
7. Set Dialing Pause
01-24      Enter/Select
```

2. Press **Confirm/Enter**.

```
Set Dialing Pause
Pause Duration: 05
```

3. Use the numeric keypad to enter the number of seconds delay desired. You can select a pause of from 05 to 99 seconds.

```
Set Dialing Pause
Pause Duration: 10
```

4. Press **Confirm/Enter**.

Set Number of Rings

Use this setting to select the number of times your fax will ring before it responds to an incoming call. You can select any number of rings between 2 and 6.

1. To set the number of rings, press **Program**, **0, 9**, **Confirm/Enter**, **0, 8.**

```
8. Set Number Rings
01-24      Enter/Select
```

2. Press **Confirm/Enter**.

```
Set Number of Rings
Number of Rings : 2
```

3. Use the numeric keypad to enter the desired number of rings.

```
Set Number of Rings
Number of Rings: 4
```

4. Then press **Confirm/Enter**.

Second Telephone Hold

Your fax allows connection of a second telephone or answering device for added convenience (see page 13). You may choose to answer calls using the handset of the second phone. If you would like to be able to put your callers on hold when talking on the second phone, follow the steps below. (The initial setting for the second telephone hold function is off, so—when your unit is first installed—it won't let you put a call on hold if you are talking on a telephone connected to the "Phone 2" jack.)

To turn the second telephone hold feature on:

1. Press **Program, 0, 9, Confirm/Enter, 0, 9.**

```
9. 2nd Telephone Hold
01-24      Enter/Select
```

2. Press **Confirm/Enter**.

```
2nd Tel. Hold: OFF
           Enter/Select
```

3. Press **Mode/Select** to turn the hold feature on.

```
2nd Tel. Hold: ON
           Enter/Select
```

4. Press **Confirm/Enter**.

Journal Print On/Off

The Activity Journal displays information on your 25 most recent transmissions and receptions. You can request an Activity Journal at any time (see page 83). To instruct your fax to print a journal automatically after every 25 transactions:

1. Press **Program, 0, 9, Confirm/Enter, 1, 0.**

```
10. Journal On/Off
01-24      Enter/Select
```

2. Press **Confirm/Enter**.

```
Automatic Print: Off
           Enter/Select
```

3. Press **Mode/Select** change the print setting.

```
Automatic Print: On
           Enter/Select
```

4. Then press **Confirm/Enter**.

Set Reduction

Your fax can be set to reduce received and copied documents as they are printed by your M3000. Although a TTI takes up a relatively small amount of printed space, this extra printing added to each reception sometimes turns a single page transmitted to your fax into two printed pages. The reduction settings outlined below can compensate for the remote fax machine's TTI, keeping the reception to a single page.

Note: Your M3000 is initially set to the "Auto" reduction setting. This is the proper setting for most applications. Select a different setting only if you have an unusual requirement that can't be satisfied using the "Auto" setting.

Auto—Reduces documents at variable rates up to 70%. Pages sent to your M3000 that are longer than 11 inches can often be reduced to fit on a single sheet. If the reception cannot be reduced to fit on one page, the image will print at 100% on two or more pages.

100 percent—Prints your pages without any reduction. This setting may trigger a second page on a single-page reception to compensate for the sender's TTI.

97 percent reduction—Slightly reduces all fax messages and copies and prevents an 11-inch-long document with a TTI from triggering a second page.

91 percent reduction—Provides greater reduction for some international stationery sizes and special applications.

75 percent reduction—Turns legal-sized originals into letter-sized printed copies.

To set the reception reduction rate:

1. Press **Program, 0, 9, Confirm/Enter, 1, 1.**

```
11. Set Rx Reduction
01-24      Enter/Select
```

2. Press **Confirm/Enter.**

```
Reduction Rate: Auto
           Enter/Select
```

3. Press **Mode/Select** until you reach the desired reduction rate. Choose from Auto, 100%, 97%, 91%, or 75% reduction.

```
Reduction Rate: 100%
           Enter/Select
```

4. Press **Confirm/Enter.**

Block Junk Fax

This feature guards your fax from unauthorized facsimile transmissions and eliminates "junk fax". When you activate this feature, the last four digits of the remote fax machine's Subscriber ID are compared to the last four digits of every entry in your one-touch, programmable one-touch and speed-dial directories. If the Subscriber ID of the remote unit matches any number in any of your directories, the call is accepted. If not, the call is disconnected. (Remember, the remote fax must have its telephone number programmed as its Subscriber ID. This is an optional field on the remote fax—one uncontrollable by you.)

Some fax machines do not have a Subscriber ID feature. If your M3000 is set to Block Junk Fax, you will not be able to receive from these units.

If your office uses a long-distance service that requires dialing access codes after a number, do not use the Block Junk Fax feature. If a phone number plus a long distance access code is entered into your one-touch directory, it is unlikely that the caller with

this number will add the same long-distance code to his Subscriber ID. Therefore, his Subscriber ID will not match the number in your directory and his calls will be blocked. Any kind of code included at the end of a number in your directory can cause blocked calls if the Block Junk Fax feature is activated.

To activate the Block Junk Fax feature:

1. Press **Program 0, 9, Confirm/Enter 1, 2**.

```
12. Block Junk Fax
01-24        Enter/Select
```

2. Press **Confirm/Enter**.

```
Block Junk Fax:  Off
            Enter/Select
```

3. Press **Mode/Select** to turn the blocking feature on.

```
Block Junk Fax:  On
            Enter/Select
```

4. Press **Confirm/Enter**.

Set ECM Mode

Your fax machine offers a CCITT-standard error correction mode for transmissions and receptions, to assure that important documents look clear and sharp.

During ECM transmission, your fax sends your document in small high-speed segments. After each segment is sent, your fax waits briefly to receive a signal from the remote unit—which must also have ECM capability—confirming the image was received properly. If telephone line noise damaged some of the image data, your fax will retransmit the block until it is received properly.

ECM reception works the same way: An ECM-equipped fax will transmit to your unit in high-speed blocks of image. Your fax responds after each block is received, indicating whether the block should be sent again or was received error-free.

Using ECM can increase the length of your fax calls: Resending blocks of data adds to the total transmission time and, if you are paying for the phone call, that could add to the cost of sending your document.

Selecting ECM

ECM reserves a portion of your fax machine's memory to store image data during transmission and reception. Your fax has enough memory to store about 16 pages of CCITT Test Chart 1 at normal resolution. When you select ECM, that amount is reduced to about 12 pages. Selecting ECM operation may also slow transmission to and from your fax: Retransmitting damaged image data increases the time needed to send the document.

Select ECM operation when sending documents that require the ultimate in error correction. You can leave ECM on all the time to take advantage of its error correction whenever an ECM-equipped fax calls, or turn ECM off to free memory in your fax.

To select error correction mode:

1. Press **Program, 0, 9, Confirm/Enter, 1, 3**.

```
13. Set ECM Mode
01-24        Enter/Select
```

2. Press **Confirm/Enter**.

```
ECM Mode:  Off
           Enter/Select
```

3. Press **Mode/Select** to turn ECM operation on or off as needed.

```
ECM Mode:  On
           Enter/Select
```

4. Press **Confirm/Enter**.

Set Copy Protect

Because the M3000 is primarily designed to work as a fax, you may want to disable the copy feature to conserve donor film. Use this setting to control the use of the M3000's copy function in your office. To learn how to use your fax as a copier, see page 17.

1. Press **Program, 0, 9, Confirm/Enter, 1, 4**.

```
14. Set Copy Protect
01-24      Enter/Select
```

2. Press **Confirm/Enter**.

```
Copy Protect: Off
           Enter/Select
```

3. Press **Mode/Select** to turn copy protect on.

```
Copy Protect: On
           Enter/Select
```

4. Press **Confirm/Enter**.

Repeat the above procedure when you are ready to reactivate the copy function.

Remote Diagnostics

Your fax includes special software that allows Muratec's trained service personnel to test your fax by computer over the telephone. When you call the Muratec Customer Support Center (see page 90), you may be asked to change this setting.

1. Press **Program, 0, 9, Confirm/Enter, 1, 5**.

```
15. Remote Diagnostic
01-24      Enter/Select
```

2. Press **Confirm/Enter**.

```
Remote Diagnost.: Off
           Enter/Select
```

3. Press **Mode/Select** to change the diagnostic setting.

```
Remote Diagnost.: On
           Enter/Select
```

4. Then press **Confirm/Enter**.

Set Date and Time

The clock in your fax is protected from power failures for up to several days by an internal battery. The LCD displays time in 24-hour format.

1. To set the clock, press **Program**, **0, 9**, **Confirm/Enter**, **1, 6**.

```
16. Set Date and Time
01-24      Enter/Select
```

2. Press **Confirm/Enter**.

```
Enter Year
     '01 01/01 01:01
```

3. Use the numeric keypad to enter the last two digits of the current year.

```
Enter Year
     '93 01/01 01:01
```

4. Press **Confirm/Enter**. Then enter the number of the month.

```
Enter Month
     '93 02/01 01:01
```

5. Press **Confirm/Enter**. Enter the day.

```
Enter Date
     '93 02/26 01:01
```

6. Press **Confirm/Enter**. Now enter the hour in 24-hour format.

```
Enter Hour
     '93 02/26 12:01
```

7. Press **Confirm/Enter**. Enter the minute.

```
Enter Minute
     '93 02/26 12:00
```

8. Press **Confirm/Enter**.

Set Redial Attempts

Your fax will automatically redial a busy fax number anytime you attempt transmission using a one-touch key, speed-dial number, programmable one-touch key or a telephone number entered through the fax machine's numeric keypad. Use this setting to determine how many times your fax should redial the busy number before sounding its alarm to alert you of the unsuccessful transmission.

1. To set the number of attempts, press **Program**, **0, 9**, **Confirm/Enter**, **1**, **7**.

```
17. Set # of Redials
01-24      Enter/Select
```

2. Press **Confirm/Enter.**

```
Set # of Redials
Attempts:        2
```

3. Use the numeric keypad to select 2, 3, 4 or 5 redial attempts.

```
Set # of Redials
Attempts:        5
```

4. Then press **Confirm/Enter.**

Set Redial Interval

When your fax encounters a busy signal, it waits several minutes before redialing. Use this setting to select the interval between redial attempts.

1. To set the redial interval, press **Program, 0, 9, Confirm/Enter, 1, 8.**

```
18. Set Redial Inter
01-24      Enter/Select
```

2. Press **Confirm/Enter.**

```
Set Redial Inter
Interval:        3
```

3. Use the numeric keypad to choose a 3-, 4- or 5-minute redial interval.

```
Set Redial Inter.
Interval:        5
```

4. Then press **Confirm/Enter.**

Set Auto Receive Time

Use the Auto Receive setting below to select specific hours for your fax to switch to and from automatic answer mode. This setting switches your fax from the "Tel Ready" manual answer mode to the "Fax Ready" automatic answer mode at the times you choose (see page 20).

Do not use this setting if your fax is used with a telephone answering machine and is in the "Ans/Fax Ready" mode.

1. Press **Program, 0, 9, Confirm/Enter, 1, 9.**

```
19. Set Auto Rx Time
01-24      Enter/Select
```

2. Press **Confirm/Enter.**

```
Set Auto Rx Time
Start Time:      00:00
```

3. Using the numeric keypad, enter the hour you want automatic reception to

begin. Your fax tracks time in 24-hour or nautical format, where, for example, 11 a.m. is shown as 11:00 and 3 p.m. is shown as 15:00.

```
Set Auto Rx Time
Start Time:      17:00
```

4. Press **Confirm/Enter**. Enter the minute for automatic reception to begin.

```
Set Auto Rx Time
Start Time:      17:31
```

5. Press **Confirm/Enter**.

```
Set Auto Rx Time
End Time:        00:00
```

6. Enter the hour you want automatic reception to end.

```
Set Auto Rx Time
End Time:        07:00
```

7. Press **Confirm/Enter**. Enter the minute for automatic reception to end.

```
Set Auto Rx Time
End Time:        07:59
```

8. Press **Confirm/Enter**. To cancel this setting so changes in your fax machine's Auto Receive status are made only by using the **Receive Mode** key, return the start and end settings to 00:00.

Set Hold Melody

Your fax includes an optional melody you can use to let callers know they are on hold. The fax is set initially not to play this melody. Use the setting below if you want your callers to hear "When the Saints Go Marching In" while they are on hold.

1. Press **Program, 0, 9, Confirm/Enter, 2, 0**.

```
20. Set Hold Melody
01-24      Enter/Select
```

2. Press **Confirm/Enter**

```
Hold Melody: Off
           Enter/Select
```

3. Press **Mode/Select** to turn the melody on.

```
Hold Melody:     On
           Enter/Select
```

4. Press **Confirm/Enter**.

Enter Your TTI

Your programmable Subscriber ID and Transmit Terminal Identifier are sent automatically at the top of each document you send. The Subscriber ID and TTI appear at the

top of each page printed by the receiving fax. The Subscriber ID is your fax machine's telephone number. The TTI can be your name, business name or any message up to 22 characters long. Choose from these characters when setting your TTI:

	A	B	C	D	E	F	G	H	I	J	.	
	K	L	M	N	O	P	Q	R	S	T	.	
	U	V	W	X	Y	Z	+	,	-	.	/	
	a	b	c	d	e	f	g	h	i	j	.	
	k	l	m	n	o	p	q	r	s	t	.	
	u	v	w	x	y	z	+	,	-	.	/	
	0	1	2	3	4	5	6	7	8	9	-	
	:	;	<	=	>	?	@	[	]	{	}	
	!	"	#	$	%	&	'	(	)	*	.	
	Ç	ü	é	â	ä	à	á	Ç	ê	ë	è	
	ï	î	Ä	å	Å	É	œ	Œ	ô	ö	ò	
	û	ù	ÿ	ö	Ü	¢	£	¥	P	*f*	á	
	í	ó	ú	ñ	Ñ	ø	Ø	¿	ß	¡	o	

Tone
Speed dial
Pause

1. Press **Program**, **0**, **9**, **Confirm/Enter**, **2**, **1**.

```
21. Enter Your TTI
01-24       Enter/Select
```

2. Press **Confirm/Enter**.

```
Tel:
            Enter/Select
```

3. Press **Confirm/Enter**. Then use the numeric keypad to enter your telephone number. To make it easy for anyone receiving messages from you to respond, include your telephone area code. Press the dash key, "—", to make a dash appear in your number.

   To change a previously entered number, press **Original/Cancel**, and then begin entering the new telephone number.

```
Tel:
1-214-403-3499
```

4. Enter up to 20 numbers. Then press **Confirm/Enter**.

```
Name:
            Enter/Select
```

5. Press **Confirm/Enter**.

```
_ ABCDEFGHIJ.          00
```

6. Use the up, down, left and right arrow keys to highlight the first character of your TTI. Then press **Confirm/Enter** to enter the character.

```
 KLMNOPQRST.          01
S
```

7. Continue using the arrow keys to select letters, numerals and other characters for your TTI. Then press **Confirm/Enter** to enter each character.

```
 uvwxyz+,-./          13
Smith Company
```

8. When your TTI has been entered, press **Program.**

Set Passcode

The optional passcode in your fax can be used to protect documents set for polling, to poll documents from a Muratec fax machine with a passcode in place and to operate in a closed network with other Muratec fax machines.

The closed network option gives you a way to block "junk fax", or unwanted transmissions from unknown fax machines. When you enter a passcode as shown below and select the closed network option (see below), you instruct your fax to hang up on any facsimile machine that calls and fails to present the proper code.

Use the passcode when communicating with Muratec-manufactured fax machines only. Fax machines from other manufacturers—even those that offer their own protection codes—aren't compatible with your machine's passcode.

To cancel the passcode, return the code to 0000. This setting allows any fax from any manufacturer to send to or poll from your unit.

1. To enter a passcode, press **Program**, **0, 9**, **Confirm/Enter**, **2, 2.**

```
22. Set Passcode
01-24      Enter/Select
```

2. Press **Confirm/Enter**.

```
Set Passcode
Passcode:        0000
```

3. Use the numeric keypad to enter your passcode.

```
Set Passcode
Passcode:        1234
```

4. Then press **Confirm/Enter**.

Closed Network

You can close your fax to transmissions from unauthorized facsimile machines and eliminate "junk fax" with the closed network feature.

When you turn on the closed network, only Muratec-manufactured fax machines presenting the proper passcode can access your fax for transmission or polling. All other facsimile machines will be disconnected before transmission.

1. To begin the closed network, press **Program**, **0**, **9**, **Confirm/Enter**, **2**, **3**.

```
23. Closed Network
01-24      Enter/Select
```

2. Press **Confirm/Enter**.

```
Closed Network:   Off
           Enter/Select
```

3. Press **Mode/Select** to turn the network on.

```
Closed Network:   On
           Enter/Select
```

4. Then press **Confirm/Enter**.

Set SecureMail Boxes

SecureMail is an exclusive Muratec feature for your most confidential documents: SecureMail transmissions are sent to memory "mailboxes" in other Muratec fax machines, where they are protected by an access code selected by the mail box holder. Your fax offers up to 10 SecureMail boxes.

When a SecureMail message is received, your fax will print a message alerting the intended recipient of its arrival. Your fax is set initially to store SecureMail documents for one day. If not retrieved within 24 hours, the message will be erased from memory automatically. You can instruct your fax to store a SecureMail message for up to 31 days. See pages 38 and 43 for more information.

1. To create a SecureMail box, press **Program**, **0**, **9**, **Confirm/Enter**, **2**, **4**.

```
24. Set SecureMail Bx
01-24      Enter/Select
```

2. Press **Confirm/Enter**.

```
1. Set SecureMail Bx
1-3        Enter/Select
```

3. Press **Confirm/Enter.**

```
Set SecureMail Bx
Mailbox Number: _
```

4. Use the numeric keypad to enter the number, from 0 to 9, of the mail box you want to enter.

```
SecureMail Bx
Mailbox Number:  1
```

5. Press **Confirm/Enter**.

```
Set SecureMail Bx
Your ID Number:  0000
```

6. If you are entering this box information for the first time, press **Confirm/Enter**

and go to step 7. If you are modifying this box, enter your current ID number and press **Confirm/Enter**.

7. Use the up, down, left and right arrow keys on the control pad to highlight the first character of the name. See page 34 for a list of all characters available.

```
_ ABCDEFGHIJ.    00
```

8. Press **Confirm/Enter** to enter the character.

```
  ABCDEFGHIJ.    01
B
```

9. Continue using the arrow keys and **Confirm/Enter** to enter the mail box name. Enter up to eight characters.

```
  abcdefghij.        08
B. Smith
```

10. When the name has been entered, press **Program**.

```
Change ID Number?
          Select/Cancel
```

11. If you were changing the name on an existing box, press **Mode/Select** to save the new name and return to standby mode. If you were entering a new mail box or want to change the passcode on an existing box, go to step 12.

12. Press **Original/Cancel**.

```
Change ID Number?
Your ID Number:   0000
```

13. Use the numeric keypad to enter your passcode. (Remember that you will not be able to print messages stored in this box if you forget your passcode.)

```
Change ID Number?
Your ID Number:  1234
```

14. Press **Confirm/Enter**.

Print SecureMail Box List

This list shows each active SecureMail box and the name assigned to it. To assure the security of information stored in SecureMail boxes, this list does not show the passcodes needed to print documents stored in each box.

1. To print the SecureMail box list, press **Program**, **0**, **9**, **Confirm/Enter**, **2**, **4**.

```
24. Set SecureMail Bx
01-24      Enter/Select
```

2. Press **Confirm/Enter**, **2**.

```
2. Print Mailbox List
1-3        Copy/Select
```

3. Press **Copy** to print the list.

SecureMail Storage

The SecureMail documents you receive can be stored in SecureMail boxes for up to 31 days. This feature helps ensure you receive important secure documents. To set the storage time for SecureMail documents:

1. Press **Program, 0, 9, Confirm/Enter, 2, 4.**

```
24. Set SecureMail Bx
01-24       Enter/Select
```

2. Press **Confirm/Enter, 3.**

```
3. SecureMail Storage
1-3         Enter/Select
```

3. Press **Confirm/Enter.**

```
SecureMail Storage
(1-31)            01
```

4. Enter the number of days you want your received SecureMail documents to remain in memory. When entering a number less than 10, be sure to use two digits. Enter up to 31 days, if desired.

```
SecureMail Storage
(1-31)            09
```

5. Press **Confirm/Enter.**

Clear All Settings

This command deletes all user information from your fax and returns all dip switches to their factory positions.

Do not use this command unless you want to delete all user information—TTI, Subscriber ID, speed-dial numbers, one-touch keys, journal information and all other stored information—from your fax.

1. To clear all user settings and dip switches, Press **Program, *, 3.**

```
All Clear
            Enter/Select
```

2. Press **Confirm/Enter.**

```
All Clear
Sure?       Enter/Select
```

3. Press **Confirm/Enter** to erase all information. Press **Mode/Select** to return to standby without erasing the information.

Checking the Memory in Use

Your fax includes internal memory to store up to 16 pages for SecureMail receptions and out-of-paper receptions.

The exact number of pages you can store depends on the size of your pages, the amount of text and graphics on each page and the resolution selected.

Your fax includes a handy one-touch command to check the amount of memory in use. From the standby screen, just press **Mode/Select**. The number of delayed commands in memory will display on the top line of the LCD. The bottom line will show the same information graphically.

```
Command in Queue (02)
* * - - -
```

Then press **Mode/Select** again. Your fax will display the amount of memory in use and an approximate graphical representation. Then press **Stop** to return to standby.

```
Mem. in Use (013%)
* - - - - - - - - -
```

Print User Settings

Use this command to check your user settings. The printed report lists the settings or status of most of your fax machine's user settings and is a convenient way to verify a new setting you have entered.

1. To print the user settings, press **Program**, **0**, **7**, **Confirm/Enter**, **2.**

```
2. Print Settings
1-4        Copy/Select
```

2. Press **Copy** to begin the report.

Reception

Your fax offers several ways to answer incoming telephone calls. You can answer calls manually using the fax handset, or let your fax answer calls automatically. Your fax even includes a modular jack to allow your fax to work with a second telephone or with a telephone answering machine. Review the "Telephone Information and Setup" section on page 19 to make sure you have selected the proper settings for your fax use.

Manual (Tel Ready)

When your fax is set to "Tel Ready", (see page 20) you must answer each call using the fax handset.

```
Tel Ready
Feb 26, '93      12:00
```

To answer a call manually:

1. When the phone rings, pick up the handset.

2. If it's a voice call, talk as you would normally.
   If you hear the distinctive fax calling tones, press **Start**. Then hang up the handset. Your fax will print out the received message.

What if I answer a call in another room?

Just because your fax machine has a built-in telephone handset, there's no need to race to the fax machine every time your telephone rings. You can use any telephone in your office to answer a call once you know how to respond to fax calls:

If the call is from a fax machine, you will hear the characteristic fax "greeting" tones. Put the telephone handset down, but don't hang up. Walk to the fax machine and pick up its handset. Then press **Start**.

After you press **Start**, you can hang up both the fax machine's handset and the telephone's handset. Because remote fax machines will wait several seconds to hear reception tones from your unit, you have about 10 seconds to walk to your fax, pick up the handset and press **Start**.

Automatic Reception

You have several choices for automatic reception: Your fax can immediately begin fax reception; when a second telephone is connected and your fax answers, callers will hear a voice prompt; or your answering machine can answer incoming calls and switch fax calls directly to the fax.

Fax Ready

```
Fax Ready
Feb 26, '93      12:00
```

In the "Fax Ready" mode, your fax answers each call after a set number of rings and immediately attempts to receive a fax. (See page 26 for information on setting the number of rings before your fax will answer automatically.) If you wish, you may answer calls using the handset before the fax answers.

Tel/Fax Ready

```
Tel/Fax Ready
Feb 26, '93      12:00
```

A second telephone connected to your fax allows added convenience: You can answer calls from the telephone physically connected to the fax—with a long telephone extension cord the phone can even be in the next room—and transfer fax calls back to the fax. Your fax will automatically print out the fax message. (For information, see the section on Switch-to-Fax later in this chapter.)

When you let the fax answer in Tel/Fax Ready mode, callers will hear the following prerecorded voice prompt:

Hello. If you wish to send a fax, transmit now. If not, check the number and dial again. Thank you.

While the prompt is being played, a special bell in your fax will ring softly, letting you know your fax has answered the telephone line but has not yet attempted reception. You can pick up the fax handset at any time during the 10-second message to turn off the voice prompt and listen to the incoming call through the handset.

Ans/Fax Ready

```
Ans/Fax Ready
Feb 26, '93      12:00
```

In the "Ans/Fax Ready" mode, you can answer the calls with the fax machine's built-in handset or allow an answering machine connected to the "Phone 2" jack to respond.

When you or your answering machine answer a call, the fax will listen quietly on the line. People calling will not know the facsimile machine is there. If the call is from a remote fax machine, however, your fax will hear the distinctive transmission tones from the remote unit and will automatically come on the line to print out the message. Your telephone handset or answering machine will be disconnected when your fax comes on the line.

Although this setting normally allows the answering machine to respond to all calls, your fax will answer the line after seven rings if your answering machine breaks or does not answer for some other reason. In these cases, your fax will attempt to begin fax communication immediately and will not play the answering prompt.

For more information on using your fax with an answering machine, see "Telephone Information and Setup."

Special Answering Features

Switch to Fax

If you answer an incoming fax call with the fax machine's handset or with a telephone connected to the "Phone 2" jack, you will hear distinctive fax transmission tones. To receive the call, press **Start** and hang up. If the phone connected to your fax is in another room, press "6" on the telephone keypad two or four times (see page 79) to instruct the fax to come on the line and print the fax message.

Voice Prompt

When you have connected a second telephone to your fax, placed your fax in the "Tel./Fax Ready" mode and allow the fax to answer incoming calls automatically, callers will hear a pre-recorded voice prompt:

Hello. If you wish to send a fax, transmit now. If not, check the number and dial again. Thank you.

While the prompt is being played, a special bell in your fax will ring softly, letting you know your fax has answered the telephone line but has not yet attempted reception. You can pick up the fax handset at any time during the 10-second message to turn off the voice prompt and listen to the incoming call through the handset.

The prompt is part of the software in your fax and is available in English and Spanish (see page 23).

Print SecureMail

SecureMail is an exclusive Muratec feature for confidential document transmission: SecureMail transmissions are sent to memory "mail boxes", where they are protected by an access code selected by the mail box holder. Your fax offers up to 10 SecureMail boxes.

When a SecureMail document is received, your fax will print a message alerting the intended recipient. The received message will be erased from memory automatically if it's not retrieved within the number of days you specify (see page 38). See page 52 for information on SecureMail transmission.

1. To print a SecureMail message received into memory, press **Program**, **0, 7, Confirm/Enter, 4**.

```
4. Print SecureMail
1-4        Copy/Select
```

2. Press **Copy**.

```
Print SecureMail
Mailbox Number:
```

3. Use the numeric keypad to enter the number of the mailbox in which the message is stored. Then press **Confirm/Enter**.

```
Print SecureMail
Your ID Number:
```

4. Use the keypad to enter your access code. Then press **Confirm/Enter.** If you entered the right code, the SecureMail message will be printed.

Call Reserve

Your fax machine's call reserve feature allows you to have both telephone and facsimile communication at different times during the same call. Without call reserve, your fax prevents telephone conversations after it begins fax communication.

To use this feature, the remote fax must have a similar call-reserve capability.

To reserve a call during transmission or reception:

1. While the fax is sending or receiving, press **Monitor/Call**.

   At the remote fax, the telephone will ring after the transmission of each page.

If someone at the remote fax responds to the call request, your fax will ring several times.

2. When your fax rings, pick up the handset and press **Stop**. In a few seconds, the line will open.

3. Begin your conversation.

Note: To transmit after your conversation, insert a document into your fax before hanging up. At the end of your call, instruct the operator of the remote fax to press **Start** before hanging up. When you hear facsimile tones, press **Start** and hang up the handset.

Responding to a Call Request

1. When a remote operator requests a voice call during fax communication, your fax will ring after each page of the document is received.

2. To answer the call request, pick up the handset and press **Monitor/Call**. When the remote operator responds to your call request response, begin your conversation.

Out-of-Paper Reception

If your fax runs out of paper at night or while you are out of the office, up to 5 incoming documents of up to 16 pages total will be stored in your fax machine's memory. These messages will be printed automatically when you replace the paper.

The number of pages your fax can store in memory is determined in part by the page size of the document received and the resolution at which it was transmitted. After your fax machine's memory is full, it will ignore later fax calls and cannot receive again until you replenish the paper.

Block Junk Fax Reception

When you activate the Block Junk Fax feature, your M3000 is guarded from receiving unauthorized facsimiles. Here's how Block Junk Fax works:

The last four digits of your remote caller's Subscriber ID are compared to the last four digits in every entry in your one-touch, programmable one-touch and speed dial directories. (Remember, a Subscriber ID is the phone number of the remote fax.) If the Subscriber ID of the remote unit matches any number you've programmed into any of your directories, the call is accepted. If not, the call is disconnected.

If your office uses a long-distance service that requires dialing access codes after a number, activating this feature is not possible. For example, if you enter a phone number plus a long distance access code into your one-touch directory—1-214-555-1212-1234—it is unlikely that the caller with this number will add the same long-distance code to his Subscriber ID. Therefore, his Subscriber ID will not match the number in your directory and his calls will be blocked. Any kind of code included at the end of a number in your directory can cause blocked calls if the Block Junk Fax feature is activated.

See page 28 for information on how to set your M3000 to block junk fax.

Transmission

Page Size

Your fax can transmit an incredibly wide range of documents, from those as small as a bank check to as large as computer reports and ledger sheets. Your fax can handle almost any document, in fact, that fits within these maximum and minimum dimensions:

Maximum:	12 (w) x 35 (l) inches
Minimum:	4.7 (w) x 2.7 (l) inches

An optional setting (see page 78) allows you to transmit water well logs, medical strip charts and other special documents that are longer than 35 inches per page.

When transmitting to a fax machine with an 8.5-inch print width, your fax machine will automatically reduce your document to accommodate the receiving unit. To transmit images from documents smaller than the minimum document size or to send newspaper, cardboard, overhead transparencies and other documents that your fax cannot transmit, first copy the document on a copier. Use the copied image for your transmission.

Do not transmit:

- Extremely thin or wrinkled pages
- Documents carrying staples, glue, tape or paper clips
- Pages with duplicating carbon on one side
- Newspaper
- Fabric

Inserting a Document

Your document feeder will hold up to 30 sheets of normal-weight paper. The feeder advances pages through your fax from the bottom of the inserted stack, so you can add more pages to your feeder during transmission.

To insert a document into the feeder:

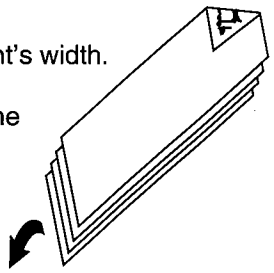

1. Adjust the document feeder guides to your document's width.
2. Fan the leading edge of your document slightly so the pages extend as shown. Insert your document face down into the document feeder.
3. Press **Mode/Select** to set the resolution for your transmission. Remember that transmission of documents in fine, superfine or grayscale mode takes longer than transmission in normal.

   Normal is suited to most typed documents. Fine is ideal for detailed or handwritten documents. Superfine reproduces the detail of extremely complicated drawings or line images. Grayscale is used to accurately transmit halftone images and photographs. Choose G2 when transmitting to a Group 2 fax. If you choose another resolution when sending to a G2 unit, your fax will fall back to G2 automatically. Superfine is available when transmitting to Muratec fax machines with superfine. All other fax machines will receive superfine transmissions in fine mode. Grayscale is available when transmitting to any Group 3 fax machine—even to those without the grayscale mode.
4. Press **Original/Cancel** to select the contrast setting needed.

Sending Photographs

When you are sending photographs and other halftone images, be sure to use the **Mode/Select** key to choose "Gray" resolution before you begin transmission.

Like normal, fine and superfine resolution, the grayscale setting gives your fax machine important information on how you want your document scanned and sent.

Normal is suited to most documents. Dark compensates for dark documents. Light compensates for weak, "washed-out" images.

5. Begin transmission.

Redialing Busy Numbers

When your fax encounters a busy signal, it will automatically attempt to redial the busy number if you tried to transmit:

- Using a one-touch key
- Using a speed-dial number
- Using a number entered through the numeric keypad

User settings control how many times the fax will try to redial a busy number and the amount of time between each attempt (see page 32).

Your fax machine cannot automatically redial when you try to transmit using the telephone handset's keypad.

Using the Keypad

1. Insert your document.

```
Fax Ready
A4   Norm   Norm
```

2. If you want to change the transmission resolution, press **Mode/Select**. If you want to set the contrast, press **Original/Cancel**.

```
Fax Ready
A4   Fine   Light
```

3. Use the numeric keypad to enter the telephone number for the remote fax. If you enter a number by mistake, press **Original/Cancel** to delete a character at a time. You can use the dash key to enter dashes in your number. The dash makes long numbers easier to read and does not alter the way your fax machine operates.

```
Fax Ready
1-214-403-3499
```

4. Press **Start**. Your fax will begin dialing.

```
1-214-403-3499
A4   Fine   Light
```

If your fax encounters a busy signal, the LCD will flash, showing the current time and the time your fax will try to redial the number.

```
     Feb. 26,    12:04
A4   Fine        12:00
```

Using a One-Touch Key

1. Insert your document.

```
Fax Ready
A4   Norm   Norm
```

2. If you want to change the transmission resolution, press **Mode/Select**. If you want to set the contrast, press **Original/Cancel**.

```
Fax Ready
A4   Fine   Light
```

3. Press the one-touch key programmed for the receiving fax. The Location ID or, if the Location ID is not programmed, the telephone number for the remote fax will be displayed in the LCD while your fax dials the remote unit.

```
Muratec
A4   Fine   Light
```

If your fax encounters a busy signal, the LCD will flash, showing the current time and the time your fax will try to redial the number.

Using a Speed-Dial Number

1. Insert your document.

```
Fax Ready
A4   Norm   Norm
```

2. If you want to change the transmission resolution, press **Mode/Select**. If you want to set the contrast, press **Original/Cancel**.

```
Fax Ready
A4   Fine   Light
```

3. Press **Speed Dialer** followed by the two-digit speed-dial number programmed for the remote fax.

```
Fax Ready
(01)
```

4. Press **Start**. The Location ID or, if the Location ID is not programmed, the telephone number for the receiving fax will be displayed.

```
Muratec
A4   Fine   Light
```

If your fax encounters a busy signal, the LCD will flash, showing the current time and the time your fax will try to redial the number.

```
     Feb. 26,    12:04
A4   Fine        12:00
```

Using the Handset or Monitor

1. Insert your document. If you want to change the transmission resolution, press **Mode/Select**. If you want to set the contrast, press **Original/Cancel.**

```
Fax Ready
A4   Fine   Light
```

2. Pick up the handset or press **Monitor/Call**.

3. Dial the telephone number for the remote fax with the handset keypad, numeric keypad, one-touch key or by pressing **Speed Dialer** and a two-digit code.

4. When the remote fax answers and you hear facsimile tones, press **Start**. Your fax machine cannot automatically redial busy numbers when you transmit using the telephone handset or monitor.

Transmission Safeguards

Your M3000 offers two more ways to send your most confidential and detailed documents. Safeguard these transmissions with the extra security and clarity offered within transmission mode 1.

Remember: The steps outlined below turn these special features on for all subsequent transmissions. Because Secure Send and Forced 4800 mode can lengthen the time needed for your transmissions, you might wish, instead, to activate these modes through the one-touch keys and speed-dial numbers you have programmed for your most important customers (see page 60 and 63).

Secure Send Mode

Transmitting with Secure Send mode provides addition assurance that your documents reach only their intended destinations. Secure Send compares the last four digits of the number you dial to the Subscriber ID of the remote unit the call reaches. If these digits match, your call goes through to its destination. If they do not match, the call is disconnected and you will receive an error message instructing you to try the call again.

Note: The Subscriber ID in a fax is a user setting. If no ID has been entered into the remote fax, Secure Send mode will prevent your transmission from occurring.

1. To activate the Secure Send mode, press **Program, Confirm/Enter**.

```
1. Secure Send Mode
1-2        Enter/Select
```

2. Press **Confirm/Enter.**

```
Secure Send Mode:Off
          Enter/Select
```

3. Press **Mode/Select** to turn Secure Send on or off.

```
Secure Send Mode:On
          Enter/Select
```

4. Press **Confirm/Enter.**

Forced 4800 Mode

Forced 4800 mode transmits at half the standard transmission speed to compensate for poor phone lines. It's also useful when placing an overseas call. You may find that using Forced 4800 transmission improves transmission quality. Remember: Because transmission time is lengthened, your long-distance calls will cost more when using Forced 4800 mode.

1. To activate the Forced 4800 mode, press **Program, 0, 1, Confirm/Enter, 2.**

```
2. Forced 4800 Mode
1-2        Enter/Select
```

2. Press **Confirm/Enter.**

```
Forced 4800:     Off
           Enter/Select
```

3. Press **Mode/Select** to turn Forced 4800 on or off.

```
Forced 4800:     On
           Enter/Select
```

4. Press **Confirm/Enter.**

Delayed Transmission

Delaying your document transmission until after business hours means there's less chance your fax will contact a machine that's busy, and may also reduce your telephone charges.

1. To delay the transmission of a document, insert the document into the feeder. Press **Mode/Select** to choose the transmission resolution and **Original/Cancel** to set the contrast, if desired.

```
Fax Ready
A4   Fine   Light
```

2. From standby, press **Program, 0, 2, Confirm/Enter.**

```
1. Delay Transmission
1-3  Enter/Select
```

3. Press **Confirm/Enter.**

```
Delay Transmission
Number of Pages:
```

4. Use the numeric keypad to enter the number of pages in your document. Enter up to 30 pages.

```
Delay Transmission
Number of Pages:       03
```

5. Press **Confirm/Enter.**

```
Delay Transmission
Enter Fax Number
```

6. Select a one-touch key or press **Speed Dial** and the two-digit speed-dial number needed. Or enter a complete telephone number as shown in the example below using the machine's keypad.

```
Delay Transmission
1-214-403-3499
```

7. Press **Confirm/Enter**. The current date and time will be displayed. Use the numeric keypad to enter the date you want transmission to take place. You can program a delayed command up to a month in advance. The sample below shows a delayed command programmed for the 27th day of the month.

```
Delay Transmission
Date:  27, 10:30
```

8. Press **Confirm/Enter**. Use the numeric keypad to enter the hour you want transmission to take place. Remember to enter the time in 24-hour format.

```
Delay Transmission
Hour: 27, 23:30
```

9. Press **Confirm/Enter.** Then enter the minute you want transmission to take place.

```
Delay Transmission
Minute: 27, 23:55
```

10. Press **Confirm/Enter**.

Relay Broadcast Initiation

Relay broadcast initiation lets you team your fax with Muratec's high-volume hub fax machines, like the Muratec F-55. Use your fax and the relay broadcast command below to send a document to an F-55 or similar hub unit. The F-55 will retransmit the document to each location in the F-55 call group you select in step 4 below.

Relay broadcast initiation is a great way to reduce telephone charges: Use your fax to send a document to an F-55 at a regional headquarters, for example. The F-55 can retransmit the document to offices within the region on local telephone lines. The overall cost of delivering your document is a fraction of what it would be if your fax made all the calls on long-distance telephone lines.

1. To start a relay broadcast, insert your document into the feeder. Press **Mode/Select** to set transmission resolution and **Original/Cancel** to set the contrast, if desired.

```
Fax Ready
A4   Fine   Light
```

2. Press **Program, 0, 2, Confirm/Enter, 2.**

```
2. Relay Broadcast
1-3        Enter/Select
```

3. Press **Confirm/Enter**.

```
Relay Broadcast
Relay Number:
```

4. Use the numeric keypad to enter the number of the call group already programmed at the remote hub fax machine. This is the group to which the hub fax will retransmit your document.

```
Relay Broadcast
Relay Number:    5
```

5. Press **Confirm/Enter**.

```
Relay Broadcast
Number of Pages:
```

6. Use the numeric keypad to enter the number of pages in your document. Enter up to 30 pages.

```
Relay Broadcast
Number of Pages: 3
```

7. Press **Confirm/Enter**.

```
Relay Broadcast
Enter Fax Number
```

8. Now enter a one-touch or speed-dial number, or enter a complete telephone number as shown below using the numeric keypad.

```
Relay Broadcast
1-214-403-3499
```

9. Press **Confirm/Enter**. The current date and time will be displayed. Press **Confirm/Enter** to begin the broadcast immediately. Or use the numeric keypad to enter the date you want the broadcast to take place.

```
Relay Broadcast
Date: 26, 12:00
```

10. Press **Confirm/Enter**. Then enter the hour you want the broadcast to begin. Remember to enter the time in 24-hour format.

```
Relay Broadcast
Hour: 26, 23:00
```

11. Press **Confirm/Enter**. Enter the minute you want the broadcast to begin.

```
Relay Broadcast
Minute: 26, 23:55
```

12. Press **Confirm/Enter**. If you requested that the broadcast initiation begin immediately, your fax will begin dialing. If you delayed the broadcast, your fax will display the time of the next delayed command on the top LCD line.

Transmit SecureMail

SecureMail is an exclusive Muratec feature for confidential documents: SecureMail transmissions are sent to memory "mail boxes" in other Muratec fax machines, where they are protected by an a code selected by the mail box holder. If the box holder does not retrieve the message within a set period of time, it is erased automatically.

Documents sent to Muratec F-75, F-72, F-70, F-38 and M3000 fax machines can be stored for up to 31 days. Documents sent to F-55, F-50 and PCF 9 fax machines are stored for 72 hours. F-45, PCF 7, M1800 and M1750 fax machines store SecureMail documents for 24 hours.

1. To send a SecureMail transmission, insert your document into the feeder. Press **Mode/Select** to choose the transmission resolution and **Original/Cancel** to set the contrast, if desired.

```
Fax Ready
A4   Fine   Light
```

2. Press **Program, 0, 2, Confirm/Enter, 3.**

```
3. Trans. SecureMail
1-3        Enter/Select
```

3. Press **Confirm/Enter.**

```
Trans.SecureMail
Mailbox Number:
```

4. Use the numeric keypad to enter the mail box number for the remote unit.

```
Trans.SecureMail
Mailbox Number:  7
```

5. Press **Confirm/Enter.**

```
Trans.SecureMail
Number of Pages:
```

6. Use the numeric keypad to enter the number of pages in your document.

```
Trans.SecureMail
Number of Pages: 3
```

7. Press **Confirm/Enter.**

```
Trans.SecureMail
Enter Fax Number
```

8. Select a one-touch key or press **Speed Dial** and the two-digit speed-dial number needed. Or enter a complete telephone number as shown below using the numeric keypad.

```
Trans.SecureMail
1-214-403-3499
```

9. Press **Confirm/Enter**. The current date and time will be displayed. Press

Confirm/Enter to begin the transmission immediately. Or use the numeric keypad to enter the day you want the transmission to take place.

```
Trans. SecureMail
Date: 26, 12:00
```

10. Press **Confirm/Enter**. Then enter the hour you want the SecureMail transmission to take place. Remember to enter the time in 24-hour format.

```
Trans. SecureMail
Hour: 26, 23:00
```

11. Press **Confirm/Enter**. Then enter the minute you want the SecureMail transmission to take place.

```
Trans. SecureMail
Minute: 26, 23:55
```

12. Press **Confirm/Enter**. If you requested that the transmission begin immediately, your fax will start dialing. If you delayed the transmission, the fax will display the start time of the next delayed command on the top line of the LCD.

Call Reserve

Your fax machine's call reserve allows you to have both telephone and facsimile communication at different times during the same call. Without call reserve, your fax prevents telephone conversations after it begins fax communication.

To use this feature, the remote fax must have a similar call-reserve capability.

To reserve a call during transmission or reception:

1. While the fax is sending or receiving, press **Monitor/Call**.

   At the remote fax, the telephone will ring after the transmission of each page.

   If someone at the remote fax responds to the call request, your fax will ring several times.

2. When your fax rings, pick up the handset and press **Stop**. In a few seconds, the line will open.

3. Begin your conversation.

   Note: To transmit after your conversation, insert a document into your fax before hanging up. At the end of your call, instruct the operator of the remote fax to press **Start** before hanging up. When you hear facsimile tones, press **Start** and hang up the handset.

Responding to a Call Request

1. When a remote operator requests a voice call during fax communication, your fax will ring after each page of the document is received.

2. To answer the call request, pick up the handset and press **Monitor/Call**. When the remote operator responds to your call request response, begin your conversation.

Polling

Polling lets you store a document in the document feeder for automatic transmission to a remote fax when that fax calls. Polling also lets you call a remote fax and retrieve a document set to be polled.

Polling procedures can be protected with a passcode (see page 35). When you enter a passcode into your fax, only Muratec-manufactured units presenting the same passcode will be allowed to poll documents from your fax.

Polling

Use polling to retrieve documents stored in other fax machines. Polling can be started immediately, or delayed to take advantage of late-night phone rates.

1. To poll from a remote fax, press **Program, 0, 3, Confirm/Enter**.

```
1. Delayed Polling
1-3        Enter/Select
```

2. Press **Confirm/Enter**.

```
Delayed Polling
Enter Fax Number
```

3. Select a one-touch key or press **Speed Dial** and enter the two-digit speed-dial number needed. Or enter a complete telephone number as shown below using the numeric keypad.

```
Delayed Polling
1-214-403-3499
```

4. Press **Confirm/Enter**. The current time and date will be displayed. Press **Confirm/Enter** to begin polling immediately. Or use the numeric keypad to enter the day you want polling to take place.

```
Delayed Polling
Date:      26, 12:00
```

5. Enter the hour you want delayed polling to take place. Remember to enter the time in 24-hour format.

```
Delayed Polling
Hour:      26, 23:00
```

6. Press **Confirm/Enter**. Enter the minute.

```
Delayed Polling
Minute:     26, 23:30
```

7. Press **Confirm/Enter**.

If you requested that polling begin immediately, your fax will start dialing. If you

programmed delayed polling, the fax will display the start time of the next delayed command on the top line of the LCD.

Sequential Polling

Sequential polling is ideal when a central fax must retrieve information from several remote units. A fax in a central sales office, for example, can be used to poll daily sales figures from up to 80 locations using the sequential polling command and a pre-programmed call group.

Of the five delayed commands your fax machine offers, only one can be a delayed sequential polling command.

1. To begin sequential polling, press **Program**, **0, 3**, **Confirm/Enter**, **2**.

```
2. Sequential Polling
1-3          Enter/Select
```

2. Press **Confirm/Enter**.

```
Sequential Polling
Enter Fax Number
```

Creating Call Groups

Call groups let you speed polling operations by linking up to 80 fax numbers into a single group. You can create call groups when you enter speed-dial numbers and one-touch keys into your autodialer.

If you entered your autodialer entries without creating call groups, don't worry: Follow the instructions on pages 61 and 64 to edit your existing autodialer entries to include call groups.

3. Now enter up to five one-touch numbers, speed-dial numbers and call group numbers. To enter a call group, press the pound (#) key and the group number needed. Press **Program** between numbers. In the example below, one-touch key 1, call group 3 and speed-dial number 25 are entered.

```
Sequential Polling
[01],G3,(25)
```

Note: It is not necessary to press **Program** after you've entered the last number.

4. Press **Confirm/Enter**. The current date and time will be displayed. Press **Confirm/Enter** to begin polling immediately. Or use the numeric keypad to enter the day you want polling to take place.

```
Sequential Polling
Date:      26, 12:00
```

5. Press **Confirm/Enter**. Then enter the hour you want polling to take place. Remember to enter the time in 24-hour format.

```
Sequential Polling
Hour:      26, 23:00
```

6. Press **Confirm/Enter**. Then enter the minute you want polling to take place.

```
Sequential Polling
Minute: 26, 23:30
```

7. Press **Confirm/Enter**.

If you requested that polling begin immediately, your fax will start dialing. If you requested delayed polling, the fax will display the start time of the next delayed command on the top line of the LCD.

Store Document for Polling

Your fax lets you store a document for polling in the document feeder. Remember that the optional passcode (see page 35) can be used to protect a document set for polling from unauthorized access.

Note: Do not store a document for polling when your fax is in the Ans/Fax reception mode. Documents stored in this mode cannot be polled by remote fax machines. If a telephone answering machine is used on the same line as your fax, do not store documents for polling until the M3000's reception mode is changed to one other than Ans/Fax. See page 19 for information on the M3000's reception modes.

1. Insert your document into the feeder. Press **Mode/Select** to choose the resolution and **Original/Cancel** to set the contrast, if desired.

2. Then press **Program**, **0**, **3**, **Confirm/Enter**, **3**.

```
3. Input Polling Doc
1-3        Enter/Select
```

3. Press **Confirm/Enter**.

```
Input Polling Doc
Number of Pages:
```

4. Use the numeric keypad to enter the number of pages in the document. Enter up to 30 pages.

```
Input Polling Doc
Number of Pages: 5
```

5. Press **Confirm/Enter**.

   While the polling document is in the feeder, your fax will briefly flash in the standby mode.

```
Poll
A4   Norm        12:00
```

   After the document has been polled, your LCD will return to its normal standby display.

Remove Polling Document

To remove a document set for polling in the document feeder, press **Stop**.

Autodialer

Your fax stores up to 80 telephone numbers—30 one-touch and 50 speed-dial—in a battery-protected autodialer. For fax or voice calls, the fax puts your most-needed telephone numbers just a touch away.

Your fax also offers a special **Tone** key needed for some special dialing requirements on rotary telephone systems. If your telephone system requires rotary dialing signals, see page 74.

One-Touch Keys

The 30 one-touch keys available in your fax are labelled **01 to 24** and **P1** to **P6**. Use the setting below to enter telephone numbers for one-touch keys **01** to **24**. See the section on programmable one-touch keys (see page 65) for information on entering keys **P1** to **P6.**

1. To enter a one-touch number, press **Program**, **0, 5, Confirm/Enter**.

```
1. Enter One-Touch
1-2        Enter/Select
```

2. Press **Confirm/Enter**.

```
One-Touch 01 to 24
     Select and Press
```

3. Press the one-touch key needed.

```
[01]= Not Stored
           Enter/Select
```

4. Press **Confirm/Enter** and use the numeric keypad to begin entering the telephone number. Your telephone number can include up to 40 characters.

```
[01] Tel Number
9-/1-214-403
```

5. To insert a dialing pause in the telephone number, press **Pause**. A hyphen and slash, "-/", will appear on the LCD. When your fax finds this combination while dialing, it will pause before completing the number. See page 26 for information on controlling the length of this pause.

6. To insert a dash in the number, press the dash key on the fax keypad. Adding a dash makes your numbers easier to read on reports and in the printed telephone directories, but does not change the way your unit dials the number entered.

```
[01] Tel Number
9-/1-214-403-3499
```

7. When the telephone number is entered, press **Confirm/Enter**.

```
(01)Attribute
          Enter/Select
```

8. If you would like to program Secure Send or Forced 4800 modes into this one-touch key, press **Confirm/Enter**. This will ensure that the feature is implemented every time the one-touch key is used. If you do not want to use Secure Send or Forced 4800 modes, press **Mode/Select** and go to step 13. See pages 48 and 49 for more information on these modes.

```
Forced 4800:     Off
          Enter/Select
```

9. To set Forced 4800 bps transmission on, press **Mode/Select**. If you would like to activate Secure Send without the benefit of Forced 4800 bps transmission, press **Confirm/Enter** and go to step 11.

```
Forced 4800:     On
          Enter/Select
```

10. Press **Confirm/Enter**.

```
Secure Send:     Off
          Enter/Select
```

11. To activate the Secure Send mode, press **Mode/Select**. If you have activated Forced 4800 mode and choose not to activate Secure Send, press **Confirm/Enter** and go to step 13.

```
Secure Send:     On
          Enter/Select
```

12. Press **Confirm/Enter**.

```
[01]=Location ID
          Enter/Select
```

13. Press **Confirm/Enter** to enter a Location ID for the number just entered. The Location ID, a word or name up to 12 characters long, appears on your printed telephone directory to make finding the right number fast and easy.

```
_ ABCDEFGHIJ.    00
```

14. Use the up, down, left and right arrow keys to highlight the first character of the Location ID. Then press **Confirm/Enter**.

```
  KLMNOPQRST.    01
M
```

15. Continue using arrow keys and **Confirm/Enter** to enter the Location ID. When complete, press **Program**.

```
[01]=Group Number
          Enter/Select
```

16. If you do not want to include this one-touch key in a telephone call group, press **Mode/Select** and go to step 20.

17. To enter the number in a call group, press **Confirm/Enter**. Call groups are used in sequential polling to speed fax communication with many remote units.

```
[01] Group Number
```

18. Use the numeric keypad to enter the call group or groups this one-touch key should appear in. The fax offers up to five call groups, numbered 1 to 5. If entering more than one group number, press **Program** between numbers. A comma will appear on the LCD between group numbers.

```
[01] Group Number
1,3,4
```

Note: It is not necessary to press **Program** after you've entered the last number.

19. When you have selected all the groups this one-touch key should appear in, press **Confirm/Enter**.

```
One-Touch 01 to 24
     Select and Press
```

20. Select the next one-touch key to enter, or press **Stop** to return to standby.

To Edit or Erase a One-Touch Key

After a one-touch key has been entered, you can edit or modify the telephone number, Location ID or group numbers programmed by repeating these steps. When the information you want to change is displayed, press **Original/Cancel**. The information programmed will be deleted and you can enter new information as shown above.

Erase One-Touch

Use this setting to delete *all* one-touch telephone numbers from your autodialer and erase the Location ID and group numbers assigned to each number.

1. Press **Program, 0, 5, Confirm/Enter, 2.**

```
2. Erase One-Touch
1-2        Select/Cancel
```

2. Press **Original/Cancel.**

```
Erase One-Touch
Sure?      Enter/Select
```

3. To erase all one-touch information, press **Original/Cancel**. Press **Mode/Select** to prevent the erasure and return to standby.

Print One-Touch

Keep a printed list of your one-touch keys nearby. The printed listing includes the one-touch key, Location ID, telephone number and group number.

1. To print the directory, press **Program, 0, 7, Confirm/Enter, 3.**

```
3. Print Dial List
1-3  Copy/Select
```

2. Press **Copy.**

Secure Send or Forced 4800 settings are also printed on the list. Follow this key when reading the codes on your list.

Setting	Secure Send	Forced 4800
S00	Off	Off
S01	Off	On
S10	On	Off
S11	On	On

One Touch Directory

No.	Location	Telephone Number	Group Number
[01]	Muratec	9-/1-214-403-3499	1,3,4 S10
[02]	Muratec HQ	9-/1-214-403-3400	2,3,5 S11

Enter Speed-Dial Numbers

The 50 speed-dial numbers available for your fax are represented by the two-digit numbers 01 to 50 on your dialing keypad.

1. To enter a speed-dial number, press **Program, 0, 6, Confirm/Enter.**

```
1. Set Speed Dial
1-2        Enter/Select
```

2. Press **Confirm/Enter.**

```
Speed Dial 01 to 50
Select and Press
```

3. Use the numeric keypad to enter the number of the speed-dial number needed. Remember to enter speed-dial numbers below 10 in two-digit form: 01, 02, 03, etc.

```
(01)
```

4. Then press **Confirm/Enter.**

```
(01)= No Stored
           Enter/Select
```

5. Press **Confirm/Enter** and use the numeric keypad to begin entering the telephone number. Your telephone number can include up to 40 characters.

```
(01) Tel Number
9-/1-214-403
```

6. To insert a dialing pause in the telephone number, press **Pause**. A hyphen and slash, "-/", will appear on the LCD. When your fax finds this combination while dialing, it will pause before completing the number. See page 26 for information on controlling the length of the pause.

7. To insert a dash in the number, press the dash key on the keypad. Adding a dash makes your numbers easier to read on reports and in printed telephone directories, but does not change the way your unit dials the number entered.

```
(01) Tel Number
9-/1-214-403-3499
```

8. When the telephone number is entered, press **Confirm/Enter**.

```
(01)Attribute
          Enter/Select
```

9. If you would like to use the Secure Send or Forced 4800 modes during this transmission, press **Confirm/Enter**. This will ensure that the feature is implemented every time the one-touch key is used. If you do not want to use Secure Send or Forced 4800 modes, press **Mode/Select** and go to step 14. See pages 48 and 49 for more information on these modes.

```
Forced 4800:     Off
          Enter/Select
```

10. To set Forced 4800 bps transmission on, press **Mode/Select**. If you would like to activate Secure Send without the benefit of Forced 4800 bps transmission, press **Confirm/Enter** and go to step 12.

```
Forced 4800:     On
          Enter/Select
```

11. Press **Confirm/Enter**.

```
Secure Send:     Off
          Enter/Select
```

12. To set Secure Send mode on, press **Mode/Select** If you have activated Forced 4800 bps and choose not to activate Secure Send, press **Confirm/Enter** and go to step 14.

```
Secure Send:     On
          Enter/Select
```

13. Press **Confirm/Enter**.

```
(01) = Location ID
          Enter/Select
```

14. Press **Confirm/Enter** to enter a Location ID for the number just entered.

The Location ID, a word or name up to 12 characters long, appears on the printed telephone directory to make finding the right number fast and easy.

```
_ ABCDEFGHIJ.    00
```

15. Use the arrow keys to highlight the first character of the Location ID. Then press **Confirm/Enter**.

```
  KLMNOPQRST.    01
M
```

16. Continue using arrow keys and **Confirm/Enter** to enter the Location ID. When complete, press **Program**.

```
(01)=Group Number
           Enter/Select
```

17. If you do not want to include this speed-dial number in a call group, press **Mode/Select** and go to step 20. To enter the number in a call group, press **Confirm/Enter**. Call groups are used in broadcasting and sequential polling to speed fax communication with many remote units.

```
(01) Group Number
```

18. Use the numeric keypad to enter the call group or groups this speed-dial number should appear in. Your fax offers up to five call groups, numbered 1 to 5. If entering more than one group number, press **Program** between numbers. A comma will appear on the LCD between group numbers.

```
(01) Group Number
1,3,4
```

Note: It is not necessary to press **Program** after you've entered the last group number.

19. When you have selected all the groups this speed-dial number should appear in, press **Confirm/Enter**.

```
Speed Dial 01 to 50
     Select and Press
```

20. Use the numeric keypad to select the next speed-dial number to enter, or press **Stop** to return to standby.

To Edit or Erase A Speed-Dial Number

After a speed-dial number has been entered, you can modify the telephone number, Location ID or group numbers programmed by repeating these steps. When the information you want to change is displayed, press **Original/Cancel**. The information programmed will be deleted and you can enter new information as shown above.

Erase Speed-Dial

Use this feature to delete *all* speed-dial information from your autodialer.

1. To erase all speed-dial numbers from the autodialer, press **Program**, **0**, **6**, **Confirm/Enter**, **2**.

```
2. Erase Speed-Dial
1-2          Select/Cancel
```

2. Press **Original/Cancel**.

```
Erase Speed-Dial
Sure?        Select/Cancel
```

3. Press **Original/Cancel**. Press **Mode/Select** to prevent the erasure and return to standby with all information intact.

Print Speed-Dial

Keep a printed list of your speed-dial numbers nearby for reference. The printed listing includes the speed-dial number, Location ID, telephone number and group number.

1. To print the telephone directory, press **Program**, **0**, **7**, **Confirm/Enter**, **3**.

```
3. Print Dial List
1-4          Copy/Select
```

2. Press **Copy**.

Secure Send or Forced 4800 settings are also printed on the list. Follow this key when reading the codes on your list.

Setting	Secure Send	Forced 4800
S00	Off	Off
S01	Off	On
S10	On	Off
S11	On	On

Telephone Directory

No.	Location	Telephone Number	Group Number
(01)	Marketing	9-/1-214-403-3499	1 S11
(02)	Product Deve	9-/1-214-403-3636	1,2 S01

Special Programmable Keys

Six of the one-touch keys on your fax, **P1** through **P6**, can be used as standard one-touch keys or as special programmable keys, to put the most powerful multi-step operations just a fingertip away.

These programmable one-touch keys are great when you have a frequent need for special functions. You can program delayed transmission, relay broadcast initiation, SecureMail transmission and delayed polling commands as shown on the following pages. If you don't need these special programmable options, you can use keys **P1**

through **P6** for standard one-touch transmission. (See "One-Touch Transmission" later in this section.)

Programmable One-Touch

Use the setting below to reduce multi-step instructions to a single keystroke. Your fax lets you select from delayed transmission, relay broadcast initiation, SecureMail transmission, delayed polling and sequential polling commands when entering a programmable one-touch key.

The first five steps to program these special keys are the same regardless of the specific command you need. The remaining steps vary based on the command you have chosen. The first five steps appear below. Steps 6 and beyond for each command appear on the pages that follow.

1. To enter a programmable function, press **Program**, **1**, **0**, **Confirm/Enter**, **2**.

```
2. Program One-Touch
1-4        Enter/Select
```

2. Press **Confirm/Enter**.

```
Program Key P1 to P6
     Select and Press
```

3. Use the keypad to select the programmable key you wish to modify.

```
[P1]= Not Stored
           Enter/Select
```

4. Press **Confirm/Enter**.

```
1. Delay Transmission
1-5        Enter/Select
```

5. Now press **Mode/Select** to choose the type of command you need.

If you select	See page
Transmission	66
Relay broadcast initiation	67
SecureMail transmission	68
Polling	69
Sequential polling	70

Delayed Transmission

For an explanation of the uses and benefits of delayed transmission, see page 49.

Steps 1 through 5 appear above.

```
1. Delay Transmission
1-5        Enter/Select
```

6. Press **Confirm/Enter**.

```
Delay Transmission
Number of Pages:
```

7. Use the numeric keypad to enter the number of pages you will send. To send

Note

If you enter a specific number of pages in step 7, your fax will be able to number the pages you send as—for example—1/3, 2/3, 3/3.

If you leave the entry in step 7 blank, your fax will number the pages sequentially, 1, 2, 3.

a different number of pages each time, just press **Confirm/Enter** to tell the fax to accept as many pages as you have inserted in the feeder.

8. Press **Confirm/Enter**.

```
Delay Transmission
Enter Fax Number
```

9. Select a one-touch key or press **Speed Dialer** and enter the two-digit speed-dial number needed. Or enter a complete telephone number as shown below using the numeric keypad.

```
1-214-403-3499
```

10. Press **Confirm/Enter**. The current time will be displayed.

```
Delay Transmission
Hour:      14:55
```

11. If you want the transmission to begin whenever you press the one-touch key, press **Confirm/Enter** without changing the time shown on the LCD. This tells your fax that the programmable function shouldn't be held for a particular time of day.

    If you want the programmable function to take place at a specific time, like after business hours when telephone rates are lower, use the numeric keypad to enter a specific hour for the transmission. Then press **Confirm/Enter** and enter the minute for the transmission. Remember that your fax tracks time in 24-hour format, so hours after noon are represented by numbers greater than 12. The example below shows 10:15 p.m.

```
Delay Transmission
Minute:    22:15
```

12. When the time has been entered, press **Confirm/Enter**.

Relay Broadcast Initiation

For an explanation of the uses and benefits of relay broadcast initiation, see page 50.

Steps 1 through 5 appear on page 66.

```
2. Relay Broadcast
1-5        Enter/Select
```

6. Press **Confirm/Enter**.

```
Relay Broadcast
Relay Number:
```

7. Enter the group number for the relay portion of the broadcast. Remember this group must already be programmed at the remote Muratec fax to which you are transmitting. See page 50 for information.

```
Relay Broadcast
Relay Number:          5
```

Note

If you enter a specific number of pages in step 9, your fax will be able to number the pages you send as—for example—1/3, 2/3, 3/3.

If you leave the entry in step 9 blank, your fax will number the pages sequentially, 1, 2, 3.

8. Then press **Confirm/Enter**.

```
Relay Broadcast
Number of Pages:
```

9. Enter the number of pages included in the relay broadcast. To broadcast a different number of pages each time, press **Confirm/Enter**.

```
Relay Broadcast
Enter Fax Number
```

10. Select a one-touch key or press **Speed Dialer** and the two-digit speed-dial number needed. Or enter a complete telephone number as shown below using the numeric keypad.

```
Relay Broadcast
1-214-403-3499
```

11. When the telephone number for the remote unit has been entered, press **Confirm/Enter**. The current time will be displayed.

```
Relay Broadcast
Hour: 14:55
```

12. If you want the command to begin whenever you press the one-touch key, press **Confirm/Enter** without changing the time shown. This tells your fax that the programmable function shouldn't be held for a particular time of day.

    If you want the programmable function to take place at a specific time, like after business hours when telephone rates are lower, use the numeric keypad to enter a specific hour for the transmission. Then press **Confirm/Enter** and enter the minute for the transmission. The example below shows 10:15 p.m.

```
Relay Broadcast
Minute:    22:15
```

13. When the time has been entered, press **Confirm/Enter**.

Transmit SecureMail

For an explanation of the uses and benefits of SecureMail, see page 52.

Steps 1 through 5 appear on page 66.

```
3. Trans.SecureMail
1-5        Enter/Select
```

6. Press **Confirm/Enter**.

```
Trans.SecureMail
Mailbox Number:
```

7. Use the numeric keypad to enter the mail box number for the transmission. Remember that this mail box must already exist at the remote Muratec fax to which you are transmitting. See page 52 for more information.

```
Trans.SecureMail
Mailbox Number:  9
```

Note

If you enter a specific number of pages in step 9, your fax will be able to number the pages you send as—for example—1/3, 2/3, 3/3.

If you leave the entry in step 9 blank, your fax will number the pages sequentially, 1, 2, 3.

8. Then press **Confirm/Enter**.

```
Trans.SecureMail
Number of Pages:
```

9. Use the numeric keypad to enter the number of pages included in the SecureMail transmission. To transmit a different number of pages each time, press **Confirm/Enter.**

```
Trans.SecureMail
Enter Fax Number
```

10. Select a one-touch key or press **Speed Dialer** and the two-digit speed-dial number needed. Or enter a complete telephone number as shown below using the numeric keypad.

```
Trans.SecureMail
1-214-403-3499
```

11. When the telephone number for the remote unit has been entered, press **Confirm/Enter**. The current time will be displayed.

```
Trans.SecureMail
Hour:      14:55
```

12. If you want the command to begin whenever you press the one-touch key, press **Confirm/Enter** without changing the time shown on the LCD. This tells your fax that the programmable function shouldn't be held for a particular time of day.

    If you want the programmable function to take place at a specific time, like after business hours when telephone rates are lower, use the numeric keypad to enter a specific hour for the transmission. Then press **Confirm/Enter** and enter the minute for the transmission. Remember that your fax tracks time in 24-hour format, so hours after noon are represented by numbers greater than 12. The example below shows 10:15 p.m.

```
Trans.SecureMail
Minute:    22:15
```

13. When the time has been entered, press **Confirm/Enter.**

Polling

For an explanation of the uses and benefits of polling, see page 55.

Steps 1 through 5 appear on page 66.

```
4. Delayed Polling
1-5        Enter/Select
```

6. Press **Confirm/Enter**.

```
Delayed Polling
Enter Fax Number
```

7. Select a one-touch key or press **Speed Dialer** and the two-digit speed-dial code needed. Or enter a complete telephone number as shown below using the numeric keypad.

```
Delayed Polling
1-214-403-3499
```

8. When the telephone number for the remote unit has been entered, press **Confirm/Enter**. The current time will be displayed.

```
Delayed Polling
Hour:      14:55
```

9. Press **Confirm/Enter** without changing the time to instruct your fax to begin the programmable function whenever you press the program one-touch key. Or use the numeric keypad to enter the hour for polling. Then press **Confirm/Enter** and enter the minute.

```
Delayed Polling
Minute:    22:30
```

10. When the time has been entered, press **Confirm/Enter**.

Sequential Polling

For an explanation of the uses and benefits of sequential polling, see page 56. Steps 1 through 5 appear on page 66.

```
5. Sequential Polling
1-5        Enter/Select
```

6. Press **Confirm/Enter**.

```
Sequential Polling
Enter Fax Number
```

7. Enter the locations from which you will poll using group numbers, speed-dial numbers or one-touch numbers. Press **Speed Dialer** and a two-digit code to enter a speed-dial number. Press the pound key (#) and a single-digit number to enter a call group. Or press a one-touch key. You can enter up to five numbers for the polling operation. Press **Program** between numbers.

```
Sequential Polling
(01),G3,[05]
```

Note: It is not necessary to press **Program** after entering the last number.

8. When the telephone numbers have been entered, press **Confirm/Enter**. The current time will be displayed.

```
Sequential Polling
Hour: 14:55
```

9. If you want the command to begin when you press the one-touch key, press **Confirm/Enter** without changing the time shown on the LCD. This tells your fax that the programmable function shouldn't be held for a particular time of day.

   If you want the programmable function to take place at a specific time, like after business hours when telephone rates are lower, use the numeric keypad to enter a specific hour for the command. Then press **Confirm/Enter** and enter the minute for the command. Remember that your fax tracks time in 24-hour format, so hours after

noon are represented by numbers greater than 12. The example below shows 10:15 p.m.

```
Sequential Polling
Minute:    22:15
```

10. When the time has been entered, press **Confirm/Enter**.

One-Touch Transmission

If you do not plan to use **P1** through **P6** for special programmable functions, use the setting below to use them as standard one-touch keys.

1. To enter a one-touch number, press **Program**, **1**, **0**, **Confirm/Enter**.

```
1. Enter One-Touch
1-4        Enter/Select
```

2. Press **Confirm/Enter**.

```
Program Key P1 to P6
     Select and Press
```

3. Press the desired one-touch key.

```
[P1]= Not Stored
           Enter/Select
```

4. Press **Confirm/Enter** and use the numeric keypad to begin entering the telephone number. The telephone number can include up to 40 characters.

```
[P1] Tel Number
9-/1-214-403
```

5. To insert a dialing pause in the telephone number, press **Pause**. A hyphen and slash, "-/", will appear on the LCD. See page 24 for information on controlling the length of the pause.

6. To insert a dash in the number, press the dash key on the fax keypad. Adding a dash makes your numbers easier to read in the printed telephone directories, but does not change the way your unit dials the number entered.

```
[P1] Tel Number
9-/1-214-403-3499
```

7. When the telephone number is entered, press **Confirm/Enter**.

```
(01)Attribute
           Enter/Select
```

8. If you would like to use Secure Send or Forced 4800 modes, press **Confirm/Enter**. If not, press **Mode/Select** and go to step 14.

```
Forced 4800:     Off
           Enter/Select
```

9. To set Forced 4800 bps transmission on, press **Mode/Select**.If you would like to activate Secure Send without the benefit of Forced 4800 bps transmission, press **Confirm/Enter** and go to step 11.

```
Force 4800:      On
           Enter/Select
```

10. Press **Confirm/Enter**.

```
Secure Send:     Off
           Enter/Select
```

11. To activate the Secure Send mode, press **Mode/Select**. If you have activated Forced 4800 bps and choose not to activate Secure Send, press **Confirm/Enter** and go to step 13.

```
Secure Send:     On
           Enter/Select
```

12. Press **Confirm/Enter**.

```
[P1]=Location ID
           Enter/Select
```

13. Press **Confirm/Enter** to enter a Location ID for the number just entered. The Location ID, a word or name up to 12 characters long, appears on the printed telephone directory to make finding the right number fast and easy.

```
_ ABCDEFGHIJ.    00
```

14. Use the arrow keys to highlight the first character of the Location ID. Then press **Confirm/Enter**.

```
  KLMNOPQRST.    01
M
```

15. Continue using arrow keys and **Confirm/Enter** to enter the Location ID. When complete, press **Program**.

```
[P1]= Group Number
           Enter/Select
```

16. If you do not want to include this key in a call group, press **Mode/Select** and go to step 20. To enter the number in a call group, press **Confirm/Enter**. Call groups are used in broadcasting and sequential polling to speed fax communication with many remote units.

```
[P1] Group Number
```

17. Use the numeric keypad to enter the call group or groups this key should appear in. The fax offers up to five call groups, numbered 1 to 5. Press **Program** between numbers. A comma will appear between group numbers.

```
[P1] Group Number
1,3,4
```

Note: It is not necessary to press **Program** after you've entered the last number.

18. When you have selected all the groups this one-touch key should appear in, press **Confirm/Enter**.

```
Program Key P1 to P6
     Select and Press
```

19. Select the next one-touch key to enter, or press **Stop** to return to standby.

After a key has been entered, you can modify the telephone number, Location ID or group numbers programmed by repeating these steps. When the information you want to change is displayed, press **Original/Cancel**. The information programmed will be deleted and you can enter new information as shown above.

Erase Programmable One-Touch Keys

Use these settings to erase programmable one-touch keys.

To erase programmable keys being used for standard one-touch transmission:

1. Press **Program**, **1**, **0**, **Confirm/Enter**, **3**.

```
3. Erase One-Touch
1-5        Enter/Cancel
```

2. Press **Original/Cancel**.

```
Erase One-Touch
Sure?      Select/Cancel
```

3. Press **Original/Cancel** to delete one-touch transmission information. Press **Mode/Select** to return to standby without deleting the information.

To erase programmable keys used for programmable one-touch functions:

1. Press **Program**, **1**, **0**, **Confirm/Enter**, **4**.

```
3. Erase Pr. One-Touch
1-5        Enter/Cancel
```

2. Press **Original/Cancel**.

```
Erase Pr. One-Touch
Sure?      Select/Cancel
```

3. Press **Original/Cancel** to delete programmable one-touch information. Press Mode/Select to return to standby without deleting the information.

Print Programmable One-Touch Keys

Keep a report of your programmable one-touch keys nearby for handy reference. The printed report lists each key in use and the transmission or programmable one-touch function assigned to it. You will also receive speed dial and one-touch reports with this listing.

1. To print a list of programmable one-touch keys in use, press **Program**, **0**, **7**, **Confirm/Enter**, **3**.

```
3. Print Dial List
1-4        Copy/Select
```

2. Press **Copy** to print the report.

Secure Send or Forced 4800 settings are also printed on the list.

Setting	Secure Send	Forced 4800
S00	Off	Off
S01	Off	On
S10	On	Off
S11	On	On

Program Mode List

No.	Remote Location	Start	Note
[P1]	9-1-214-403-3499	22:45	Transmission S00
[P2]	9-1-214-403-3636	23:30	transmit SecureMail Mailbox # 3 S00
[P3]	[01] (01) G1	--:--	Sequential Polling

Tone Key and Rotary-Dial Systems

When you selected the phone line type for your fax (see page 23), you instructed it to use either tone or rotary signals when dialing. If your local telephone system or phone line requires rotary dialing signals but your long distance company requires tone access codes, your fax machine's **Tone** key lets you mix both types of signals in your one-touch or speed-dial numbers. Use of the **Tone** key is not necessary on tone telephone systems.

1. To switch from rotary to tone dialing signals, begin entering your telephone number as a one-touch, speed-dial or programmable one-touch key as shown on the pages above. A one-touch key is shown below as an example:

```
[01] Tel. Number
1-214-403-3499
```

2. When you reach the point at which you must switch to tone signals, enter a dialing pause, "-/". Then press **Tone**. A dash and exclamation point will appear on your screen.

```
[01] Tel. Number
1-214-403-3499-/-!
```

3. Now enter the numbers that must be dialed using tone signals. Although your LCD displays just 20 characters, you can enter up to 40 characters.

```
[01] Tel. Number
214-403-3499-/-!1234
```

4. Finish entering the one-touch, speed-dial or programmable one-touch key. In use, your fax will dial the first part of the telephone number (in this example, "1-214-403-3499") with rotary signals, then pause and switch to tone signals for the rest of the number ("1234" in the example above).

Delayed Commands

Your fax can store 5 delayed commands in memory for unattended fax communication when you're away. Just program the command to take place at any time—even up to 31 days later. Your fax does the rest.

The commands below allow you to view a printed schedule of the delayed commands in memory and erase a delayed command from memory.

Print Commands

1. To print a list of the delayed commands programmed in your fax, press **Program, 0, 8, Confirm/Enter.**

```
1. Print Commands
1-2        Copy/Select
```

2. Press **Copy**. Your fax will print a list of all delayed commands in memory, showing the remote location, start time and type of command scheduled.

List of Commands

No.	Remote Location	Start	Note
1	9-403-3499	26,22:45	Polling
2	[01]	26,23:55	Polling
3	G1 [01]	26,22:35	Sequential Polling
4	9-/1-214-403-3636	26,20:45	Transmission S00

Erase Command

1. To delete a delayed command, press **Program, 0, 8, Confirm/Enter, 2.**

```
2. Erase Commands
1-2        Select/Cancel
```

2. Press **Original/Cancel.**

```
Erase Commands
Command Number:
```

3. Use the numeric keypad to enter the number of the command to be erased. Refer to a printed list of delayed commands (see above), if needed.

```
Erase Commands
Command Number:  2
```

4. Press **Confirm/Enter.**

Software Switches

Some special features in your fax are available by selecting soft dip switches—on/off switches in the software.

Use care when making these settings, because it is possible to change or prevent proper fax operation with an incorrect switch setting. If you think you made an incorrect setting, call the Muratec Customer Support Center (see page 90). You can also use the clear memory command (see page 38) to instantly return all dip switches to their factory settings, but this command deletes all user information—like your TTI, Subscriber ID and autodialer entries—from your unit's memory.

Add to Document Length for TTI

Your fax machine includes a special feature that serves as a courtesy to the owners of the plain-paper fax machines with which you communicate.

A TTI normally adds extra length to a transmitted page. This is not a concern for most thermal and plain-paper fax users. However, a transmitted document that's longer than a letter-sized sheet requires a few plain-paper units to print a second page. Your M3000 does not have this limitation and can reduce incoming documents automatically.

To prevent the extra length required for your TTI from causing some plain-paper fax machines to print a second page, your fax machine normally deletes a very small portion of the top of every image transmitted. The top 1/8 inch of your document is not transmitted and your TTI and Subscriber ID are sent in its place. To cancel this feature, use the setting below. Remember that cancelling this feature may cause some plain-paper fax machines to print two pages for each page you send.

1. Press **Program**, *****, **2**.

```
Set Parameter
          Enter/Select
```

2. Press **Confirm/Enter**.

```
Set Parameter
SOFT DIP 0 00000000
```

3. Press **Mode/Select** 1 time to reach dip switch 1.

```
Set Parameter
SOFT DIP 1 00000000
```

4. Press the right arrow 1 time. Then enter a "1" using the numeric keypad.

```
Set Parameter
SOFT DIP 1 01000000
```

5. Press **Confirm/Enter**.

```
Set Parameter
SOFT DIP 2 10100000
```

7. Press **Stop** to return to standby.

To return to the factory setting, enter a "0" in step 4 above.

Unlimited Page Length: Reception

A sensor in your fax stops reception if it ever detects a single page longer than about 10 feet. This sensor is designed to detect paper jams at remote fax machines that transmit to your unit. These jams could cause you to waste paper and tie up your telephone line.

If you must receive documents that are sent as very long uncut pages, like medical strip charts or water well logs, use the setting below to disable this sensor. Your fax will print the received documents on several sheets of letter- or legal-sized paper.

1. Press **Program**, *****, **2**.

```
Set Parameter
          Enter/Select
```

2. Press **Confirm/Enter** 4 times to reach dip switch 3.

```
Set Parameter
SOFT DIP 3 11010000
```

3. Enter a "0" using the numeric keypad.

```
Set Parameter
SOFT DIP 3 01010000
```

4. Press **Confirm/Enter**.

```
Set Parameter
SOFT DIP 4 00000000
```

5. Press **Stop** to return to standby.

To return to the factory setting, enter a "1" in step 3 above.

Unlimited Page Length: Transmission

Your fax can transmit individual pages up to 35 inches long. If you must transmit very long unbroken pages, like medical strip charts or water well logs, use the setting below to disable your fax machine's paper-jam sensor.

1. Press **Program**, *****, **2**.

```
Set Parameter
          Enter/Select
```

2. Press **Confirm/Enter** 4 times to reach dip switch 3.

```
Set Parameter
SOFT DIP 3 11010000
```

3. Press the right arrow key once.

```
Set Parameter
SOFT DIP 3 11010000
```

4. Enter a "0" using the numeric keypad.

```
Set Parameter
SOFT DIP 3 10010000
```

5. Press **Confirm/Enter**.

```
Set Parameter
SOFT DIP 4 00000000
```

6. Press **Stop** to return to standby.

To return to the factory setting, enter a "1" in step 4 above.

Switch-to-Fax Signals

The switch-to-fax feature lets you transfer an incoming fax call from the phone physically connected to the "Phone 2" jack back to the fax for printing (see page 42).

Your unit initially requires you to press "6" two times on the phone handset to send the call back. Use the setting below to change that setting to four times.

Although it is unlikely, it's possible for the human voice to duplicate the tone signal frequencies of the "6" on your handset. If this happens, your fax could disconnect the line during communication. Changing the setting requires you to press "6" four times to send a call back to the fax, making accidental disconnection more unlikely.

1. Press **Program, *, 2.**

```
Set Parameter
          Enter/Select
```

2. Press **Confirm/Enter** 19 times to reach dip switch 1.

```
Set Parameter
SOFT DIP I 00001000
```

4. Press the right arrow key 5 times.

```
Set Parameter
SOFT DIP I 00001000
```

5. Enter a "1" using the numeric keypad.

```
Set Parameter
SOFT DIP I 00001100
```

6. Press **Confirm/Enter**.

```
Set Parameter
SOFT DIP J 00000000
```

7. Press **Stop** to return to standby.

To return to the factory setting, enter a "0" in step 5 above.

Select Auto Answer by Telephone

If you forget to set your fax to automatic answer when you leave the office, this feature lets you call from any telephone in the world and turn the auto receive function on.

To make use of this option, follow the steps below. Then, if you forget to choose automatic answer, just call your fax machine from any phone and let your fax ring 22 or more times. Your fax will switch over so it answers subsequent calls automatically.

1. Press **Program, *, 2.**

```
Set Parameter
          Enter/Select
```

2. Press **Confirm/Enter** 26 times to reach dip switch P.

```
Set Parameter
SOFT DIP P 00100110
```

3. Press the right arrow key 3 times.

```
Set Parameter
SOFT DIP P 00100110
```

4. Enter a "1" using the numeric keypad.

```
Set Parameter
SOFT DIP P 00110110
```

5. Press **Confirm/Enter.**

```
Set Parameter
SOFT DIP Q 00000000
```

6. Press **Stop** to return to standby.

To return to the factory setting, enter a "0" in step 4 above.

Print Counter

This setting lets you keep track of the number of documents your fax has printed, scanned, transmitted and copied. When the feature is activated, this information appears on your journal:

- An "S" (Scan) appears on your Transmit Journal. This records the number of pages that pass through the scanner, including pages you transmit and pages you scan in for memory transmission.
- A "T" (Transmit) represents the number of pages transmitted.
- An "R" (Receive) keeps track of received pages.
- A "P" (Print) appears on your Receive Journal, and indicates the number of pages printed, including transmissions, copies, Activity Journals and confirmation reports.

These numbers will reset to zero when you clear your machine's memory or when the number 50,000 is reached. To turn the print counter on:

1. Press **Program, *, 2.**

```
Set Parameter
          Enter/Select
```

2. Press **Confirm/Enter** 28 times to reach dip switch R.

```
Set Parameter
SOFT DIP R 00100000
```

3. Enter a "1" using the numeric keypad.

```
Set Parameter
SOFT DIP R 10100000
```

4. Press **Confirm/Enter**.

```
Set Parameter
SOFT DIP S 00101010
```

5. Press **Stop** to return to standby.

To return to the factory setting, enter a "0" in step 3 above.

Voice Prompt Delay

The voice prompt is played when you have your fax set to the Tel./Fax Ready mode (see page 20) and allow the fax machine to answer an incoming call. Most automatic fax machines calling your fax will not be hampered by this voice prompt.

If callers tell you their fax machines are unable to send messages when you have the voice prompt in use, use the setting below to add a delay before your fax begins the prompt. This delay makes it easier for these units to send messages to your fax.

1. Press **Program**, *****, **2**.

```
Set Parameter
          Enter/Select
```

2. Press **Confirm/Enter** 29 times to reach dip switch S.

```
Set Parameter
SOFT DIP S 00101010
```

3. Press the right arrow key 1 time.

```
Set Parameter
SOFT DIP S 00101010
```

4. Enter a "1" using the numeric keypad.

```
Set Parameter
SOFT DIP S 01101010
```

5. Press **Confirm/Enter**.

```
Set Parameter
SOFT DIP T 00000010
```

6. Press **Stop** to return to standby.

To return to the factory setting, enter a "0" in step 4 above.

Set Scanner Width

Your fax machine's default setting for B4-width scanning is 9.9 inches. This scan width accommodates most wide documents you transmit, and is accessed using the software's user settings (see page 24).

You can change the B4 default setting from 9.9 to 10.1 inches if you wish. To change the B4 setting from 9.9 to 10.1 inches:

1. Press **Program, *, 1, Confirm/Enter**.

```
Set Parameter
SYS DIP 1 00000000
```

2. Press **Mode/Select** two times.

```
Set Parameter
SYS DIP 3 10001000
```

3. Enter a "0" using the numeric keypad.

```
Set Parameter
SYS DIP 3 00001000
```

4. Press **Confirm/Enter**.

```
Set Parameter
SYS DIP 4 00001100
```

5. Press **Stop** to return to standby.

Activity Journal

Just as a checkbook records your daily financial transactions, your Activity Journal records daily fax activities, allowing you to keep track of your important communications.

Your 25 most recent transmissions and receptions print as two separate journals, either automatically or any time you wish. Information on the Activity Journal includes transmission mode, number of pages sent, result and any error messages encountered.

You can also choose to print the total number of pages your fax has transmitted and received so you can keep track of fax use. See page 80 for information on printing the print counter with your Activity Journal.

There is no need to erase or "clear" your Activity Journal: The journals show only the 25 most recent transactions. When the 26th transaction is recorded, the oldest transaction will be deleted automatically.

To instruct your fax to print an Activity Journal after every 25 transactions, see page 25. To print a journal manually at any time:

1. Press **Program, 0, 7, Confirm/Enter**.

```
1. Print Journal
1-4        Copy/Select
```

2. Press **Copy**.

MURATEC PRODUCT DEV TEL 214-403-3499 Mar 27 92 12:55

Mar 25 - Mar 27

Transmit Journal

No	Remote Location	Mode	Start	Time	Pages	Result	Note
001	Muratec Dallas	Fine	25, 08 30	03 ' 34	03	OK	Tx
002	Muratec Paris	Sfine	25, 15 47	07 ' 57	06	OK	Tx
003	Carr Studio	Norm	25, 22 55	01 ' 12	01	OK	Tx
004	214-403-3400	Fine	25, 23 30	06 34	09	OK	Tx
001	G3	Fine	26, 09 15	02 ' 02	01	OK	Tx
002	S.W. Supply	Sfine	26, 17 25	06 ' 59	05	OK	Tx
003	Engineering	Norm	26, 23 55	02 ' 33	03	OK	Tx
001	Don's Pizza	Fine	27, 01 15	01 ' 46	01	OK	Tx

Activity Journal

No.—Each fax transmission or reception is numbered, with the series beginning at 001 each day. If several transmissions or receptions are numbered "001" on your journal, they occurred on different days: Look at the Start column (below) to determine which day each transaction took place.

Location—Information identifying the sender or receiver is recorded in this space. The information printed in this column is sent to your fax by the remote unit and can be programmed by the remote operator as desired, so it may not be the same telephone number or business name you entered in your autodialer. When communicating with

Muratec-manufactured fax machines, the remote unit's TTI will be recorded here. When communicating with other fax machines, the Subscriber ID will be printed.

Mode—Records the resolution of the transmission or reception.

Start—The first number in this column shows the day a fax transaction occurred. For example, 03 means the transaction took place on the third day of the month. Use the Period field at the top of each journal to determine the month (see above).

The entry after the comma is the time the transaction took place. The time is recorded on a 24-hour clock, so an entry of 15:00 means the transmission or reception began at 3:00 p.m.

Time—Records the length of each transaction, from the time the phone connection is made to the time the last page finishes transmitting or receiving.

Pages—Records the number of pages transmitted or received.

Result—Shows the outcome of a transmission or reception. If an error occurs, the error code is listed here.

Note—Tells the operator information about special operations. A fax transmission made using the handset, for example, is shown as "Manual".

When "Location" Data is Missing or Wrong

If the Location column does not record the telephone number or business name you expected to see:

1. There may not be one programmed at the remote unit. The telephone number and TTI are optional on most units, and may not have been programmed by the operator of the remote fax. Communication with these units will record a "G3" or "G2" on your journal, showing you were communicating with a Group 3 or Group 2 fax.

2. Since these fields are optional, users can enter any information they want into them—even blank spaces. It is possible the Subscriber ID entered by the remote operator, for example, is not the same number your unit dialed to send the fax.

3. Some fax machines do not offer a programmable telephone number or TTI. Communication with these units will record a "G3" on your journal, showing you were communicating with a Group 3 fax.

4. The transaction may be cut off before the phone number and TTI can be exchanged. In such cases, your Activity Journal will usually show an error message showing the communication was not complete.

5. Poor telephone lines can sometimes block the transmission of the Subscriber ID and TTI.

6. A few fax manufacturers do not follow the CCITT standards for Subscriber ID and TTI data. In these cases, information appearing in your Location column can be garbled and unreadable.

Problem Solving

Paper Jams

Your fax is designed for years of reliable use. From time to time, however, you may encounter a problem that causes a document to become jammed inside your fax.

Original Document Paper Jams

To clear an original document that is jammed in the feeder of your fax:

1. Turn your fax machine off.
2. Press the scanner access release (1), found to the left of the handset cradle. Open the scanner access cover (2) of your fax.
3. Carefully pull your original document (3) out of the fax. Do not try to transmit wrinkled or torn documents.
4. Pressing firmly (4) on the scanner access cover, close your fax.
5. Turn your fax machine on.

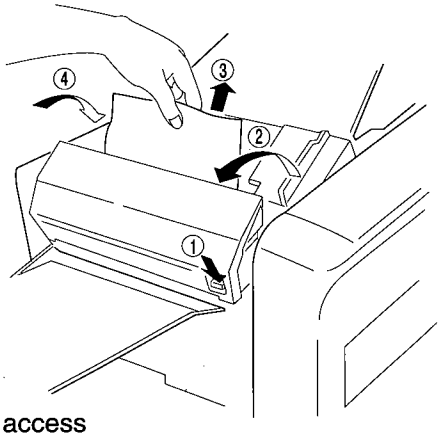

To clear a document that is jammed in the printer of your M3000:

1. Turn your fax machine off.
2. Open the access cover.

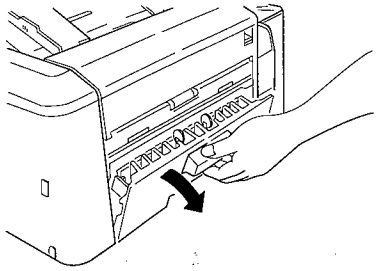

3. Carefully pull the jammed document out of the fax.
4. Close your fax, pressing firmly on the front of the cover.
5. Turn the fax on.

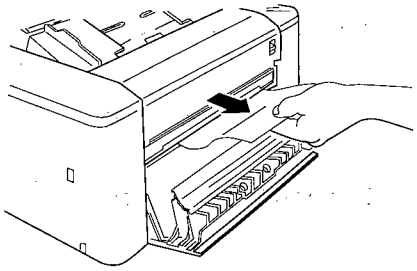

Received Document Paper Jams

To clear a received document that is jammed in your fax:

1. Turn your fax machine off.
2. Press the fax machine's top cover release, located on the top of your fax, under the document hopper. Open the cover to your fax.
3. Carefully pull the jammed recording paper out of your fax. Do not try to pull the received document through your fax machine's document exit.
4. Close your fax, pressing firmly on the front of the cover.
5. Turn your fax machine on.

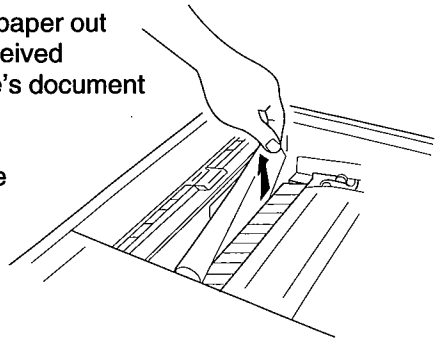

Troubleshooting

Occasionally your unit will detect a problem with the telephone line in use or encounter some trouble in transmission or reception. When it does, it will alert you with the lighted Alarm lamp and a beeping alarm tone.

You can further identify the problem with the LCD display messages, Activity Journal check messages and printed error codes. See the following sections for information about these troubleshooting methods.

Alarm

Your fax will alert you with the lighted Alarm lamp and a beeping alarm if the following occurs:

- Your fax has trouble transmitting
- Your fax has trouble receiving
- Your fax is out of paper

Press **Stop** to cancel the Alarm LED and tone.

LCD Messages

These error messages appear in your unit's LCD and help in troubleshooting fax communication problems.

Insert Document Again

Your document was not inserted correctly during transmission. Carefully replace your document in the feeder, adjust the document guides to the proper width and try again.

Insert Document

Your unit attempted to carry out a command without a document in its document feeder. Place your document in the feeder and try the command again.

Confirm Paper Supply

Your fax is out of paper. Receptions will be stored in memory until paper is replaced or memory capabilities are exceeded. Add letter or legal paper to the paper cassette (see page 16).

No Document Stored

The remote machine you contacted did not receive the SecureMail document you tried

to transmit, or there is no received SecureMail document stored in your fax machine's memory.

No Command Stored The programmable one-touch key you selected does not have a command programmed.

Please Close Cover One of your unit's covers is not closed. Press firmly on the cover to close it.

Hang Up Telephone The handset to your unit is off hook after transaction. Return the handset to its cradle.

Nothing Stored The one-touch, speed-dial or group number selected has not been programmed in the autodialer. Try programming the number again.

Check Lamp The lamp in your unit's scanner may be defective, preventing transmission and copying. Call Muratec's Customer Support Center (see page 90) or contact your local facsimile dealer for help.

Verify Operation of Remote Machine Communication with the remote machine was not possible. This message can be caused by calling an older Group 1 machine that's not compatible with your fax, reaching a fax machine that is broken or out of paper, or dialing a wrong number. Use the fax telephone handset to call the number manually. Ask the remote operator to check the remote fax.

Verify Readability of Transmitted Copy Poor telephone line conditions may have made the document you received unreadable. If so, call the remote location and request that the document be transmitted again.

Please Transmit Again Your transmission may not have been completed. Poor phone lines, a document feeder jam or problems at the remote machine may have been the cause. Try the transmission again.

Clear Rx Paper Remove jammed recording paper from unit. Call the remote location and request that the document be transmitted again.

Change Donor Film Replace the Ink Donor Film with a new rolls. Until the film is replaced, receptions will be stored in memory.

Cannot Transmit The fax is already occupied with another command. For example, a document may be set for polling or waiting in the feeder for a delayed command to be executed later. Remove the document from the feeder and begin your operation again, or wait until the current command is completed.

Please Wait Commands or numbers were entered through the keyboard too quickly. Wait a moment and then try again.

Add Paper This command will appear on your LCD when paper is as low as 35 sheets. All fax functions will continue as usual. Replenish recording paper as soon as possible.

Pls. Close Cassette The recording paper cassette is open. Please close to resume fax operation.

Telephone Line was Busy Your fax was unable to complete the communication requested. The remote fax may be busy or set to manual reception with no operator nearby. Call the remote unit and ask the operator to check the fax.

Error Codes

These codes are printed on your unit's Activity Journal and can be used with the other messages to identify the cause of an error. Codes prefaced by a "T" occur during transmission. Those with an "R" occur during reception and "D" codes occur while dialing.

T.1.1.—The remote unit did not respond to your facsimile. Call the operator of the remote unit.

Service Questions

If you have questions about your fax or its use, call Muratec's Customer Support Center at **1-800-347-3295**.

Trained Muratec service representatives are available from 7:30 a.m. to 7:30 p.m. Monday through Friday Central time, excluding holidays, to resolve any questions not answered in this manual.

Have your fax machine's serial number ready for the service technician when you call. The serial number is printed on a bar code label on the back of your machine. The last eight numbers of the alpha-numeric bar code make up your serial number. The serial number is shown as item 3 in the diagram below.

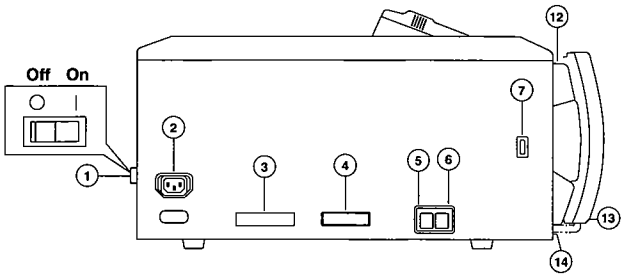

Common Questions

Installation

Q: I don't want to install a dedicated phone line for my fax, so I've connected my fax to a PBX phone system. When I get a fax call, all the phones ring. How do I prevent this?

A: Call your PBX manufacturer for assistance. They may be able to convert one of the PBX lines for fax use only.

Q: Can I use a dust cover on my fax?

A: No: A dust cover blocks air circulation and could cause your fax to overheat.

Answering Device

Q: Can I use my fax machine and an answering machine together?

A: Yes. Muratec facsimile machines with the automatic voice/fax switch let you connect your answering machine to the fax machine's "Phone 2" jack for perfect side-by-side operation (see page 19).

Q: How should I modify my answering machine message when I use it with my fax machine?

A: Your fax listens quietly on the line whenever an answering machine connected to the fax machine's "Phone 2" jack answers a call. When your fax detects transmission signals from a remote unit, it immediately disconnects the answering machine and begins fax reception.

When you record your answering machine message, be sure to tell callers that your fax is monitoring the line and that callers with fax messages can begin their transmissions immediately. Keep your outgoing message to fewer than 10 seconds, if possible (see page 21).

Q: Can a caller leave both voice and fax messages on the same call?

A: Yes. Modify your answering machine message to explain that callers can leave a voice message on your answering machine, then press Start to begin their fax transmission. Your Muratec fax will detect the switch from voice to fax and will come on the line to print the message.

Q: My fax rings and the LCD shows "CALLED", but a fax message never comes through. What's wrong with my machine?

A: The caller may have dialed the wrong number, then hung up. Also, if you're using an answering device or a second telephone with your fax, make sure it's properly set up to handle incoming calls (see page 19).

First check to make sure your answering device is connected to the Phone 2 jack and the fax is set in the "Ans/Fax Ready" mode. If your outgoing message is more than 10 seconds long or if you have your answering device set to answer after more than two rings, it's likely the transmitting fax will "time out" before it hears tones from your machine.

To ensure that you receive fax transmissions, change your outgoing message so it is fewer than 10 seconds long and set your answering machine to answer after 2 rings. Both measures will help to cut down on this disconnect time.

Q: I have an answering machine connected to my fax. My fax is set to answer after two rings, but it doesn't answer until after seven rings. What should I do?

A: When your fax is set in the "Ans/Fax Ready" mode, it always waits for the answering machine to answer the call. If the answering machine does not answer, your fax will pick up the call after the seventh ring. Make sure you set your answering machine to answer after one or two rings.

User Settings

Q: I transmitted an 11-inch-wide document. The remote operator called me and said part of the image was chopped off. What can I do to prevent this?

A. You need to adjust your fax machine's scanning width from 8.5 inches to 9.9 inches. See page 24 for more information.

Serial Number

Q: Where is the serial number on my fax?

A: Look on the back panel of your fax. You will see a label with a bar code printed on it. The last eight numbers form your serial number (see page 90).

Transmission

Q: Sometimes my fax machine transmits very slowly. Is there any way to speed transmission time?

A: Your fax can transmit at 9600 bps. Sometimes, however, it must slow down to compensate for poor phone lines or an older, slower fax machine. Transmitting at resolutions other than "Normal" will also slow transmission.

Q: People I send fax messages to say all my documents are received at a reduced size. Is the problem with my machine or with theirs, and what can I do to correct this problem?

A: Make sure that the guides on your document feeder are adjusted to the width of the pages you send. If you leave the guides adjusted for an 11-inch wide page, for example, any 8.5-inch-wide pages you transmit will be reduced when printed at the remote machine.

Q: Do I have to dial a "1" for long distance?

A: Yes. Remember to include any numbers needed for long-distance dialing when you program your one-touch and speed-dial numbers. You can even include a special pause character needed when calling through a telephone system that requires "9-" to reach an outside line (see page 63).

Q: How do I send to an overseas telephone number?

A: Dialing requirements for overseas calls may vary depending on your local telecommunication company's requirements. For most overseas calls, dial 011, then the appropriate country code, city code and phone number. Country and city codes are frequently included in the front section of telephone directories.

Q: How do I send to a fax unit that's on a telephone system extension or PBX?

A: Insert your document into the feeder and place your call using your fax machine's handset. When the PBX or system operator answers, ask for the desired extension. When you hear fax tones from the remote unit, press Start, then hang up the handset.

Q: Can I transmit if my fax is out of paper?

A: Yes, however communication results (see page 23) are not available when transmitting without paper in your fax.

Q: Can I transmit pages from a newspaper?

A: No. Newspaper can jam in your document feeder.

Q: Can I transmit a document after using correction fluid on it?

A: Yes, as long as the fluid is completely dry before the document passes through the machine.

Q: I inserted a document in the feeder and dialed the remote fax, but my machine didn't transmit. Now a new time appears on my LCD below the current time. What does this display mean?

A: The remote machine was busy and your LCD displayed the time for the next redial attempt as shown in the example below.

```
Oct 11, 93 9:34
Oct 11, 93 9:30
```

For more information on setting the number of redial attempts, see the section on User Settings.

Q: My manual says the average transmission speed for a page is 18 seconds, but when I transmit a page it can take much longer to transmit one page. Why?

A: The average transmission speed stated in your manual is based on transmission of CCITT Test Chart 1 and does not include dialing and handshaking between fax machines. The test chart is a standardized letter used to test fax transmission times.

Some reasons for varying transmission speeds follow:

1. The pages you transmit may contain more information to be scanned than CCITT Test Chart 1.

2. The transmission time measured for test documents does not include handshake time. The handshake is the protocol fax machines use to "introduce" themselves.

3. Transmissions that use fine, superfine or grayscale take longer to transmit than transmissions using Normal mode.

Q: I tried transmitting from my document feeder, but it didn't work. The time blinked on my LCD, but my fax didn't transmit.

A: Because your fax didn't transmit, the remote fax was probably busy or not in operation. The time you see blinking on your fax LCD indicates the time your fax will attempt to automatically redial.

Reception

Q: I have not been able to receive fax calls manually. I tried pressing Start when I hear fax tones, but the phone line disconnects. What am I doing wrong?

A: When you pick up the handset and hear calling tones from a remote fax, press Start before you hang up the handset. Your machine will begin reception.

Q: My fax rings and the LCD shows "CALLED", but a fax message never comes through. What's wrong with my machine?

A: The caller may have dialed the wrong number, then hung up. Also, if you're using an answering device or a second telephone with your fax, make sure it's properly set up to handle incoming calls (see page 21).

Q: How can I manually receive a fax while I am talking on the phone?

A: If you want to receive a fax message, tell the operator to insert a document in the remote unit and press Start. After you hear fax tones, press Start. Your fax will take over the line and receive the document. If you wish to reconnect the voice line after the message has been received, press Monitor/Call while the fax is printing. After the transmission is complete, your fax machine will ring. You can then pick up the handset and resume your conversation.

Q: My fax machine also serves as my business telephone. I keep hanging up on my fax calls because I'm not sure what a fax calling tone is supposed to sound like. What should I be listening for?

A: Fax calling tones are shrill, high-pitched electronic whistling noises that repeat every few seconds.

Q: I tried dialing "6,6" from a phone in another room to switch a fax call to my fax, but it doesn't work. Why?

A: The second phone that you use to switch fax calls to your fax must be connected to your fax machine's Phone 2 connection. See page 42 for more information.

Q: Can I transmit and receive at the same time?

A: No, but use the call mode (see page 43) to ask the remote operator if he or she wants to transmit or receive after your transaction is completed.

Q: I have my fax set to answer automatically. Sometimes when I try to answer a call manually, the handset is dead. What's wrong?

A: Your fax answered the call before you could get to it, and disconnected the telephone. Try setting the number of rings to six instead of two (see User Settings).

Q: When I answer my fax calls manually, I wait for calling tones, press Start, then the line goes dead. I'm worried I might lose a call.

A: The built-in phone handset goes dead after you press Start because the call has been disconnected from the phone and switched over to the fax.

Q: My fax machine frequently interrupts my voice calls. What can be done to prevent this?

A: In a very few cases, some voices, clicks and other sounds over the telephone line may cause your fax to think it's hearing calling tones from a remote fax. To remedy this, set the machine to Tel Ready and answer your fax manually when you're in the office. Return the fax to the setting you prefer when you leave the office.

Q: I have my fax set to answer automatically, but I sometimes answer calls manually. Sometimes my callers are subjected to piercing, shrill tones. I have to shut off the fax to stop these tones, and only then can I carry on a conversation. What can I do?

A: Your fax is answering the call before you are—it assumes a fax is calling, so it sends out receiving tones. Try setting the number of rings to six instead of two (see User Settings).

Polling

Q: Remote operators have tried to poll my fax, but aren't able to retrieve the stored document. What's wrong?

A: You probably entered a passcode restricting access to your fax. Give your passcode to authorized Muratec operators only. Also, remember that when you are storing a document to be polled, your fax can not be in the Ans/Fax reception mode. Storing a document with your fax in any other automatic reception mode is fine.

Delayed Commands

Q: I tried to enter two delayed sequential polling commands, but my fax will only accept one. What's wrong?

A: Your fax allows only one delayed broadcast command and one delayed sequential polling command. You can enter several transmission, non-sequential polling and SecureMail commands, for example, but you can enter only one delayed broadcast and one delayed sequential polling command.

Activity Journal

Q: The telephone number that appeared on my Activity Journal is not the same as the number I dialed. Why not?

A: The Location information that appears on the Activity Journal doesn't come from your fax: It is received from the remote fax during transmission and reception.

Let's say you transmit to a fax at telephone number 1-214-403-3499. It's possible your Activity Journal will just show 403-3499, or even another number altogether, because the information is programmed by the remote operator. (And because your Subscriber ID and TTI appear on the journals of remote units, take a minute to make sure the information is correct and includes your area code. That way, people you communicate with always receive your full name and telephone number.)

Q: What does an asterisk in the Result column of my Activity Journal mean?

A: The fax transaction took place using Error Correction Mode. For more information, see page 29.

Q: Sometimes a phone number appears in the Remote Location column of my Activity Journal, and sometimes a company name appears. Why?

A: When your fax communicates with another Muratec-manufactured unit, the TTI or company name for the remote unit is saved in your Activity Journal. When you communicate with non-Muratec units, the Subscriber ID or telephone number is saved.

Q: How do I clear my Activity Journal?

A: There is no need to clear your journal: The Activity Journal displays only the 25 most recent transmissions and receptions. When your fax reaches the 25-transaction limit, it will drop the oldest entry and add the most recent to the bottom of the journal.

Q: Why is the number "001" used more than one time on the Activity Journal?

A: The journal begins numbering at "001" each day. Your Transmit Journal, for example, may have several occurrences of "001" because several days of fax activity were recorded.

Q: When I unplug my machine, will I lose programmed information like my TTI, autodialer numbers and time and date?

A: No. The battery for your fax will protect user settings for an extended period of time if power fails or you decide to move your fax. Remember, however, that battery back-up does not extend to documents and delayed commands in memory, only to user settings.

Q: A line of characters appears just below the table on both my transmit and receive journals. What do these characters mean?

A: The information given after the headings "S" and "T" show you the number of pages scanned and transmitted by your fax; the information given after the headings "P" and "R" show you the number of pages printed and received. See page 80 for more information.

Displays and Lamps

Q: What is the Confirm light and how do I turn it off?

A: The Confirm light lets you know a confirmation report has been requested after transmissions (see page 23).

Q: What does "Called" mean?

A: Your fax has been called by a remote fax or phone.

	in Muratec fax machines to convert a document image into digital facsimile information. Fluorescent light reflected off your document is received by the CCD array and is converted into a digital signal for transmission.
CCITT	Abbreviation for the Consultative Committee for International Telegraph and Telephone, a telecommunications forum for member countries of the United Nations. CCITT Study Group XIV established the primary groups for facsimile equipment, covering communication protocol and transmission.
CCITT V.29 and V.27 ter.	A standard set of communication procedures allowing fax machines to talk to all other units adhering to those standards.
Closed Network	A network of fax machines that limit access to the network to other units having the same passcode. Some Muratec fax machines offer passcode protection and can participate in a closed network.
Compatibility	The term "compatible" describes the ability of separate things to function together. Muratec fax machines offer CCITT Group 3 compatibility, the modern standard for worldwide communication. Many Muratec units offer Group 2 and North American FM compatibility, as well.
Copy Mode	You can use your Muratec fax as a convenience copier. Many Muratec units can copy in two or more levels of resolution.
Database Polling	See Polling.
Data Compression	Used in digital fax machines to speed transmission. See Digital Facsimile, MH, MR and MSE, SMSE.
Delayed Transmission	Some Muratec fax machines offer one or more delayed commands, allowing you to load documents into your fax machine during work hours for transmission after hours.
Digital	The description of information using a series of two characters or signals. Morse code, for example, represents each character of the alphabet with a unique series of dashes and dots. Digital fax machines convert the graphic image of your document into a series of zeros and ones.
Digital Facsimile	Unlike analog systems that scan every portion of a document, digital fax machines survey a document's overall picture content. Digital fax machines scan a line and convert the information into a binary code of zeros and ones. The fax machine can take this information and compress it, providing transmission speeds of less than one minute per page. Muratec units offer the standard Group 3 data compression method for rapid transmissions to any other Group 3 fax, and many Muratec units offer proprietary transmission speeds for faster transmissions between Muratec-manufactured units.
Dip Switches	Dual in-line package switch: A two-position on-off switch. Many Muratec fax machines include dip switches to control optional settings or features. Check your operating instructions for more information.
ECM	Error correction mode. A CCITT-approved feature for Group 3 fax machines. ECM transmission sends document image data in blocks, and retransmits each block until received properly by the receiving unit.
Effective Printing Width	The widest image that can be printed on your fax. The effective width can be influenced by the CCITT group of the unit transmitting to your fax machine.

Effective Scan Width	The maximum width the scanner in your fax can scan during transmission.
Facsimile	Although business fax use has grown rapidly since the advent of fast, powerful Group 3 units, facsimile communication itself has a surprisingly long history. The first facsimile system was introduced in 1842, and wide-spread service was underway before 1910. In the United States, fax units attached to home radios provided facsimile newspaper service in several cities through the late 1940s. Facsimile's growing success for news transmission was halted, however, by the development of commercial television.
Fallback	Group 3 fax machines operate at the highest transmission speed possible on a given telephone line. Muratec systems offer automatic fallback, so if line quality drops during transmission your fax machine will reduce speed to the fastest possible level.
Fine Resolution	203H x 196V lpi. Also shown as G3F on some units.
Grayscale	Not a level of resolution, but a method of scanning and transmitting halftone images. Muratec fax machines with grayscale abilities interpret photographs in levels of gray between white and black. The transmitting fax machine must have grayscale ability to send a photographic image accurately, but the receiving machine does not need it to print the image.
G2	Used on some Muratec units to identify Group 2 resolution or to identify when a document is being transmitted to a Group 2 fax machine.
Group 4	A CCITT standard for capturing, processing, communicating and outputting all forms of data. Group 4 will be used for extremely high-volume fax communication in coming years, but the expense of leased, dedicated digital telephone lines will continue to make Group 3 fax the best choice for millions of fax owners.
Handshaking	Used by telecommunications and computer equipment to "introduce" two systems to each other. Facsimiles use a handshaking protocol, for example, to identify the CCITT group of each unit and to begin fax communication.
Hz	Or hertz. A measure of frequency equal to one cycle per second. Used in the specifications for your fax, it identifies the AC power your unit requires. Call your electrician if you don't know the specifications of your office outlets.
LCD	Liquid crystal display. Used on some Muratec units for status displays.
LED	Light emitting diode. Used on some Muratec units for displays and lamps.
Load Number	A number assigned to telecommunications equipment used in Canada and designed to prevent overloading on a telephone circuit. Read the Canadian Department of Communications information in your operating instructions or call your local telecommunications company for more information.
Location ID	An optional identifier used on Muratec fax machines. The Location ID lets you identify by name the telephone numbers programmed in your autodialer.
MH	Modified Huffman, the CCITT Group 3 standard data compression method. A feature of all Muratec fax machines, MH assures

	better than one-page-per-minute transmissions when communicating with other Group 3 units, regardless of manufacturer.
MR	Modified Read, the optional CCITT Group 3 data compression method. Used in some Muratec fax machines and in Muratec's Facsimile Interface Processor and FIP-PC Application Software.
Modem	Originally an abbreviation of modulator-demodulator, but now a common word in fax and computer use. A modem is a digital device that converts digital data (like the information from your fax machine) into an analog signal for transmission over analog lines (like your ordinary telephone line). A modem is included in your fax machine and allows it to be connected directly to your PSTN telephone line.
MSE, SMSE	Proprietary data compression methods, allowing transmissions faster than with MH and MR whenever you are communicating with a Muratec-manufactured unit. MSE and SMSE are features on many Muratec fax machines.
Original Document Size	Used when defining the largest (or smallest) document that can be fed safely through your fax machine. Check your unit's operating instructions for more information.
Passcode	A proprietary feature available on some Muratec fax machines. The four-digit passcode limits access to information set to be polled to units with the same passcode. The code also allows several Muratec systems to create a closed network, limiting access to the network to systems with the same code.
PBX	Private branch exchange. Often called PBX, PABX and others. Privately owned telephone equipment serving a particular building, business or area. Many PBX systems use digital transmission lines which, unlike more common PSTN lines, are not compatible with fax machine use. Do not connect your Muratec unit to a PBX without first checking with the system manufacturer or service representative.
Polling	Polling allows you to set a document in your fax machine for automatic transmission to a remote unit when that unit calls, or to call a remote unit and receive a document set to be polled. Polling is convenient whenever a central unit must receive information from one or several remote units. By polling the remote units, the central facility bears all telephone charges and prevents several remote units from calling at the same time. In database polling, remote units can call and request specific files of information stored inside a Muratec unit with internal memory.
PPS	Pulses per second. Used to identify rotary dialing requirements.
Private Line	Or Leased Line. A service offered by many telephone systems that provides an exclusive phone circuit between two geographic points. Your Muratec unit does not require a private line.
PSTN	Public switched telephone network. PSTNs are the most common type of telephone lines and service in use, and are in contrast to private or leased lines. Muratec units provide fast, reliable data transmission over PSTN lines. You do not need a special line or a dedicated telephone line for your Muratec unit.
Relay Broadcasting	Some Muratec fax machines can store a scanned image in internal memory, transmit the image to all units in a call group, and instruct those remote units to retransmit the image to each fax machine in the remote unit's call group. This relay broad-

casting feature speeds extremely high-volume fax communication and allows a single command to initiate document transmission hundreds of preprogrammed fax locations.

Resolution

The resolution of documents transmitted or copied by fax machines is measured by the number of horizontal (H) and vertical (V) lines per inch the unit can print. Your Muratec unit may offer one or more of these resolution levels:

Norm	203H x 98V lpi
Fine	203H x 196V lpi
Superfine	203H x 392V lpi

Receive Confirmation Report

A receive confirmation report is your assurance that the document you transmitted was received. The RCR prints out after your transmission. It identifies the receiving unit and records the date, time, transmission mode, number of pages sent and result. The RCR is an exclusive feature of Muratec fax machines and is available only when transmitting to another Muratec unit.

RJ-11C

A standard plug-in telephone jack. The RJ-11C is commonly used in North America for telephone line connections, but call your telephone company if you are unsure of the type of jacks in your office.

Rotary, Tone Dialing

Most telephone systems in the United States offer rotary and touch-tone dialing options. Muratec units are compatible with both rotary and tone dialing signal requirements. Check your operating instructions for information on setting your unit for rotary or touch-tone dialing.

SecureMail

A feature on many Muratec fax machines. SecureMail allows you to send a document to a memory "mail box" in a Muratec unit with internal storage. The transmission is protected at the receiving end by an access code created by the mail box holder.

Subscriber ID

The Subscriber ID is your unit's telephone number. Part of the TTI, the Subscriber ID is printed at the top of each page received from your unit.

Touch-Tone

A push-button telephone or the characteristic tones made by such a phone. Also a registered trademark of Western Electric for a brand of telephones.

Transmit Confirmation Report

Like the RCR, a TCR provides proof that the document you set for transmission was sent. Printed after transmission, the TCR identifies the telephone number to which you programmed the document to be sent.

Transmit Terminal Identifier

Your programmable TTI is sent automatically with every page you send, and appears at the top of each page printed by the receiving unit. The TTI can be your personal or business name or any other identifier.

Limited Warranty

This warranty is made by Murata Business Systems, Inc. ("Murata"). This warranty is valid only on Murata products purchased and used in the United States of America. This warranty applies to the product only while owned and used by the original purchaser (hereinafter referred to as the "Customer"). If ownership of the product is transferred, this warranty terminates. This warranty does not apply to any product in use for rental purposes.

This Murata product is warranted against defects in material and workmanship for ninety (90) days commencing the date of original Customer purchase. If the product is defective in material and/or workmanship (normal wear and tear excepted) during the warranty period, Murata or its authorized representative will, during Murata's established service availability hours, make necessary adjustments and repairs, including at Murata's option installation of replacement parts. Murata's service availability hours are 8:30 a.m. to 5 p.m. Monday through Friday, excluding Murata-recognized holidays. Murata will complete the necessary adjustments and repairs within a reasonable time period, as dictated by the nature of the problem and by Murata's service schedule. Replacement parts may have been used and/or reconditioned. Parts that have been replaced will remain the property of Murata. This warranty is subject to the OBLIGATIONS and EXCLUSIONS set forth.

OBLIGATIONS

1. This warranty will be honored only on presentation of the original dated authorized Murata bill of sale or Murata dealer bill of sale or sales slip to an authorized Murata service representative, authorized dealer or service center. For the name of your nearest authorized Murata service center, contact Murata Business Systems, Inc., toll-free telephone number 1-800-347-3295.

2. During the warranty period, the Customer must notify Murata by telephone of any defective product material and/or workmanship.

3. Transportation (including prepayment of freight and insurance charges) of the product to and from an authorized Murata service center, designated by Murata, is the responsibility of the Customer.

4. If Murata provides maintenance or responds to a call which is outside the scope of this warranty, such maintenance shall be billed to the Customer at Murata's then current rates for maintenance and parts and shall be due and payable in full upon receipt of invoice.

EXCLUSIONS

1. This warranty shall not cover a product with missing or altered original identification marks.

2. This warranty applies only to products that the purchaser has properly installed, adjusted and operated in accordance with the instructions set forth in or provided with product literature. This warranty does not apply to any product which has been subjected to tampering, alteration, misuse, abuse, neglect, improper installation or transportation damage. Nor does it apply to costs for any service requested for demonstration or to confirm proper operation of this product.

3. This warranty shall not apply to adjustments, repairs or replacements necessitated by any cause beyond the control of Murata (whether foreseeable or not) including, but not limited to, any malfunction, defects or failure caused by or resulting from any of the

following: improper unpacking or installation, unauthorized service or parts, or improper maintenance or cleaning, modification or repair by the Customer, accident (including without limitation, unavoidable accidents), fire, flood or other acts of God, improper telephone or electrical power or surges thereof, interconnection with or use of non-compatible equipment or supplies (including paper), or placement of the product in an area which does not conform to Murata space, electrical and/or environmental requirements.

4. Murata will not be required to make adjustments, repairs or replacements if the product is installed or used at a location deemed by Murata to be hazardous to health or safety, or if Murata is not provided with free and reasonable access to the product and a telephone during service availability hours, or if the product location is not accessible by an authorized Murata service vehicle.

EXCEPT AS EXPRESSLY SET FORTH ABOVE, AND EXCEPT TO THE EXTENT PROHIBITED BY APPLICABLE LAW, MURATA MAKES NO OTHER WARRANTIES, EXPRESS OR IMPLIED (INCLUDING, BUT NOT LIMITED TO, ANY IMPLIED WARRANTIES OF MERCHANTABILITY OR FITNESS FOR A PARTICULAR PURPOSE, AND ANY WARRANTY ARISING FROM COURSE OF DEALING OR USAGE OF TRADE), AND MURATA EXPRESSLY DISCLAIMS ALL WARRANTIES NOT STATED HEREIN. IN THE EVENT THE PRODUCT IS NOT FREE FROM DEFECTS AS WARRANTED ABOVE, THE CUSTOMER'S SOLE REMEDY SHALL BE REPAIR OR REPLACEMENT AS PROVIDED ABOVE. UNDER NO CIRCUMSTANCES SHALL MURATA BE LIABLE TO THE CUSTOMER, OR TO ANY USER, FOR ANY DAMAGES, INCLUDING ANY INCIDENTAL OR CONSEQUENTIAL DAMAGES, EXPENSES, LOST PROFITS, LOST SAVINGS OR ANY OTHER DAMAGES ARISING OUT OF THE USE OR INABILITY TO USE THE MURATA PRODUCT, EVEN IF MURATA OR ITS REPRESENTATIVES HAVE BEEN ADVISED OF THE POSSIBILITY OF SUCH DAMAGES.

Some States do not allow the exclusion or limitation of incidental or consequential damages, and some States do not allow limitations on how long an implied warranty lasts, so the above limitations or exclusions may not apply to you. This warranty gives you specific legal rights, and you may also have other rights which vary from State to State.

OMM3000

Muratec 5560 Tennyson Parkway Plano, TX 75024 (214) 403-3300 voice (214) 403-3400 fax